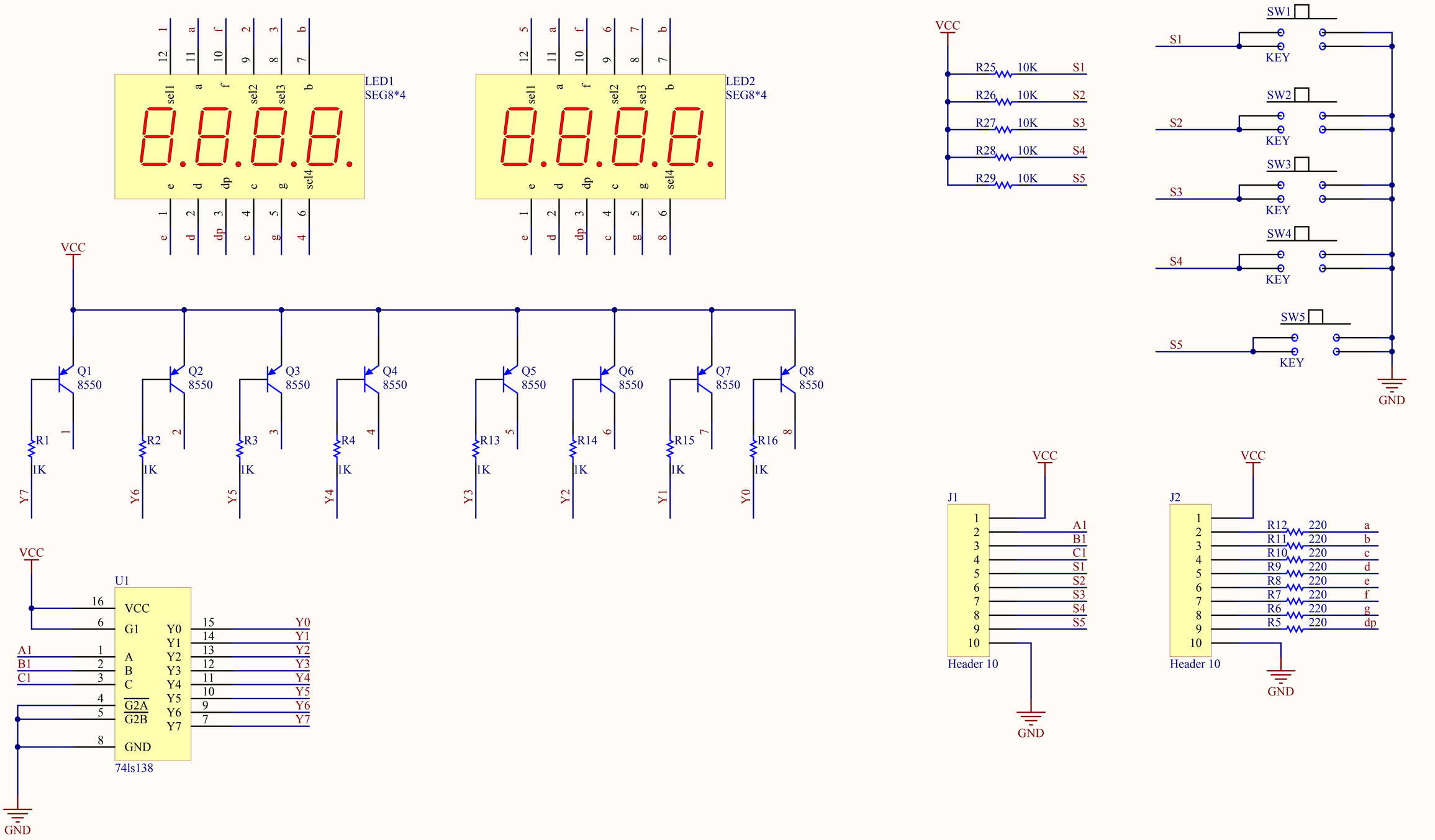

Title		
Size A4	Number	Revision
Date: 2012-10-19		Sheet of
File: C:\Documents and Settings\..\project1_Sheet1.Sch		Drawn By: