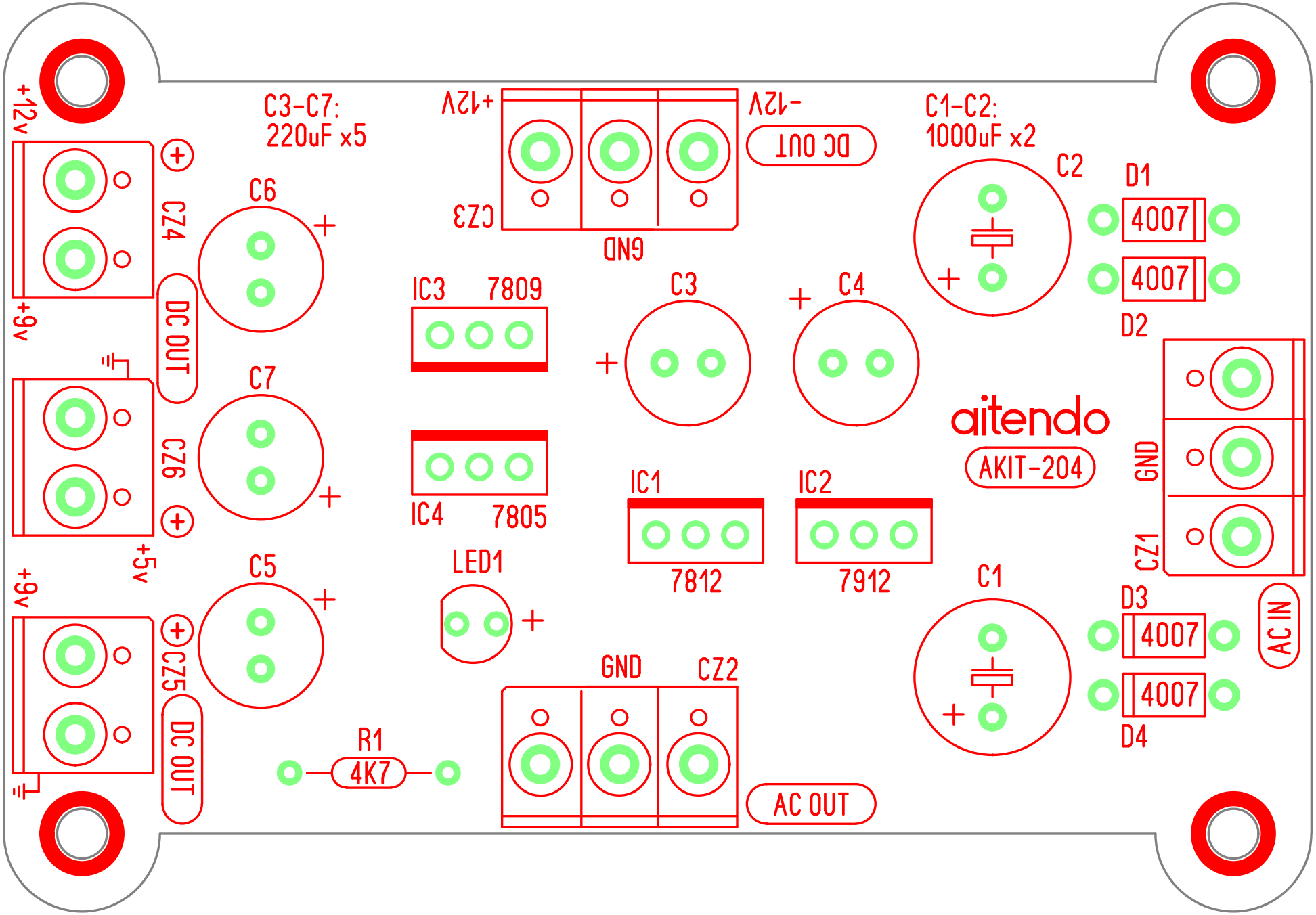
C3-C7:
220uF x5
C1-C2:
1000uF x2
+12v
-12v
DC OUT
CZ3
GND
CZ4
CZ6
CZ5
+9v
+5v
C6
C7
C5
C3
C4
C2
C1
D1
D2
D3
D4
4007
IC3
7809
IC4
7805
IC1
7812
IC2
7912
LED1
R1
4K7
GND
CZ2
AC OUT
CZ1
AC IN
aitendo
AKIT-204