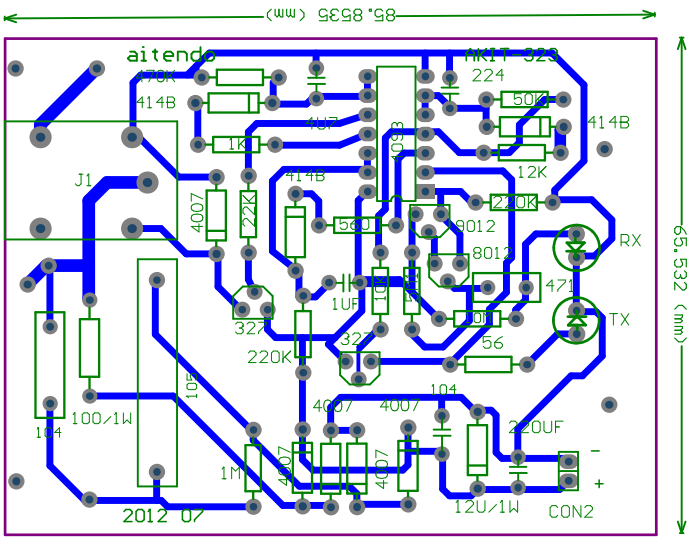
85.8535 (mm)
65.532 (mm)
aitendo
AKIT 323
224
50K
414B
12K
220K
RX
TX
471
56
J1
4007
22K
1K
4U7
414B
560
9012
8012
1UF
327
220K
100/1W
104
105
1M
4007
220UF
12U/1W
CON2
2012 07