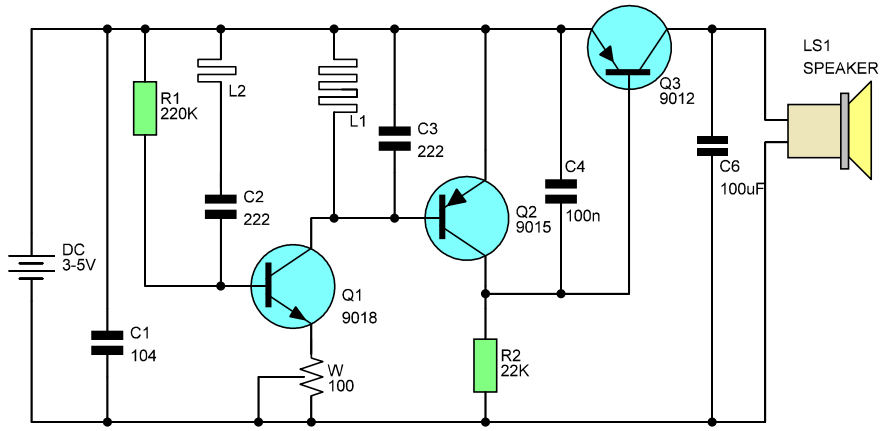

					No.	
					AKIT-400B	
		KA			aitendo	