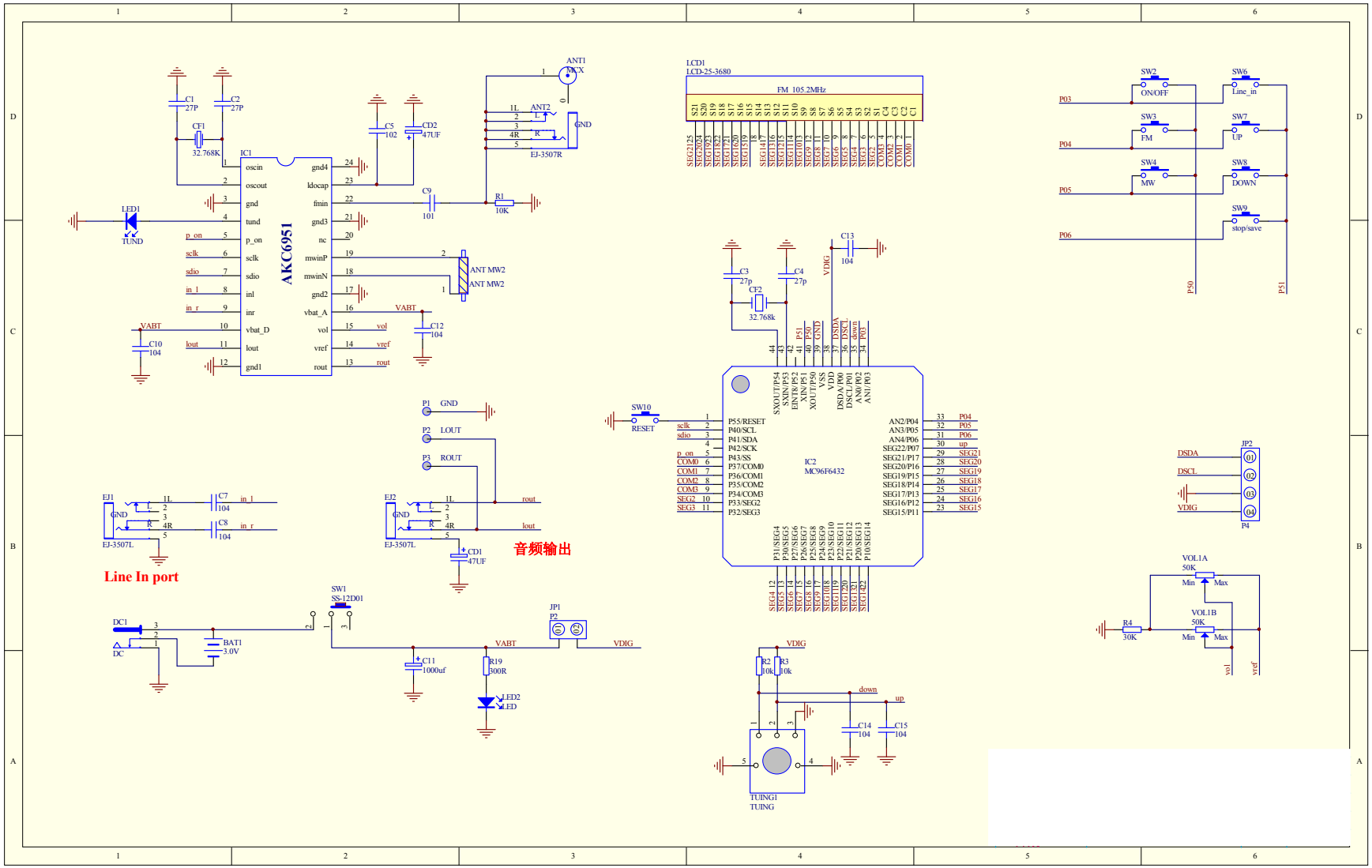
AKC6951
IC1
oscin
oscout
gnd
tund
p_on
sclk
sdio
inl
inr
vbat_D
lout
gnd1
gnd4
ldocap
finin
gnd3
nc
mwinP
mwinN
gnd2
vbat_A
vol
vref
rout
C1 27P
C2 27P
CF1 32.768K
C5 102
CD2 47UF
C9 101
R1 10K
C10 104
C12 104
LED1 TUND
VABT
ANT1 BNCX
ANT2
EJ-3507R
GND
ANT MW2
LCD1
LCD-25-3680
FM 105.2MHz
SW2 ON/OFF
SW3 FM
SW4 MW
SW6 Line_in
SW7 UP
SW8 DOWN
SW9 stop/save
P03
P04
P05
P06
P50
P51
C3 27p
C4 27p
CF2 32.768k
C13 104
VDIG
IC2
MC96F6432
SW10 RESET
P55/RESET
P40/SCL
P41/SDA
P42/SCK
P43/SS
P37/COM0
P36/COM1
P35/COM2
P34/COM3
P33/SEG2
P32/SEG3
AN2/P04
AN3/P05
AN4/P06
SEG22/P07
SEG21/P17
SEG20/P16
SEG19/P15
SEG18/P14
SEG17/P13
SEG16/P12
SEG15/P11
P1 GND
P2 LOUT
P3 ROUT
EJ1
EJ-3507L
C7 104
C8 104
in_l
in_r
EJ2
CD1 47UF
音频输出
Line In port
JP2
P4
DSDA
DSCL
VOL1A 50K
VOL1B 50K
R4 30K
Min
Max
vol
vref
SW1 SS-12D01
DC1
DC
BAT1 3.0V
C11 1000uf
R19 300R
LED2 LED
JP1 P2
R2 10k
R3 10k
C14 104
C15 104
down
up
TUING1
TUING