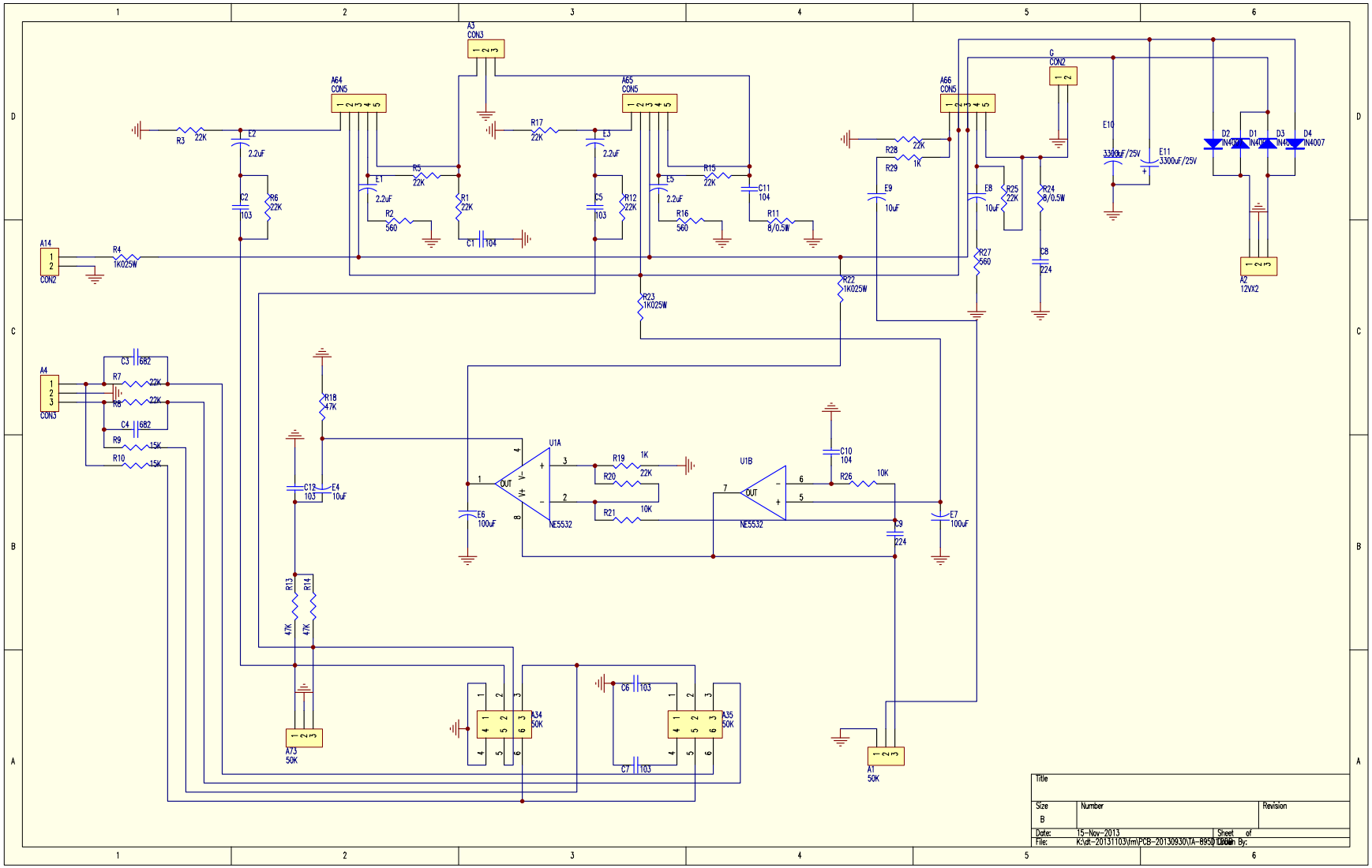
A3
CON3
A64
CON5
A65
CON5
A66
CON5
C
CON2
A14
CON2
A4
CON3
A2
12VX2
A73
50K
A34
50K
A35
50K
A1
50K
U1A
NE5532
U1B
NE5532
R3 22K
E2
2.2uF
C2
103
R6
22K
R5
22K
E1
2.2uF
R2
560
R1
22K
C1 104
R17
22K
E3
2.2uF
C5
103
R12
22K
E5
2.2uF
R16
560
R15
22K
C11
104
R11
8/0.5W
R28
22K
R29
1K
E9
10uF
E8
10uF
R25
22K
R24
8/0.5W
C8
224
R27
560
E10
3300uF/25V
E11
3300uF/25V
D2
D1
D3
D4
IN4007
R4
1K025W
R22
1K025W
R23
1K025W
C3
682
R7
22K
R8
22K
C4
682
R9
15K
R10
15K
R18
47K
C12
103
E4
10uF
E6
100uF
R19
1K
R20
22K
R21
10K
C10
104
R26
10K
C9
224
E7
100uF
R13
47K
R14
47K
C6
103
C7
103
Title
Size
B
Number
Revision
Date:
15-Nov-2013
Sheet of
File:
Drawn By: