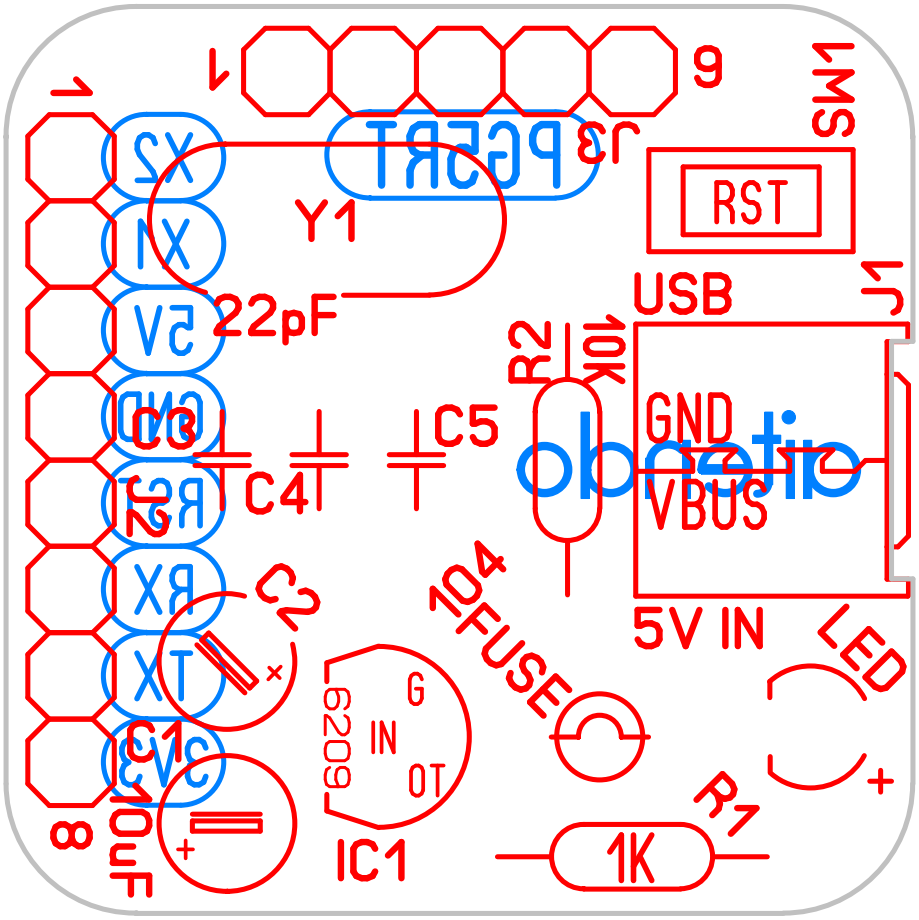

1
9
SW1
RST
J3
Y1
22pF
USB
J1
R2
10K
GND
VBUS
5V IN
C3
C4
C5
C2
C1
10uF
8
6209
G
IN
OT
IC1
104
FUSE
LED
R1
1K