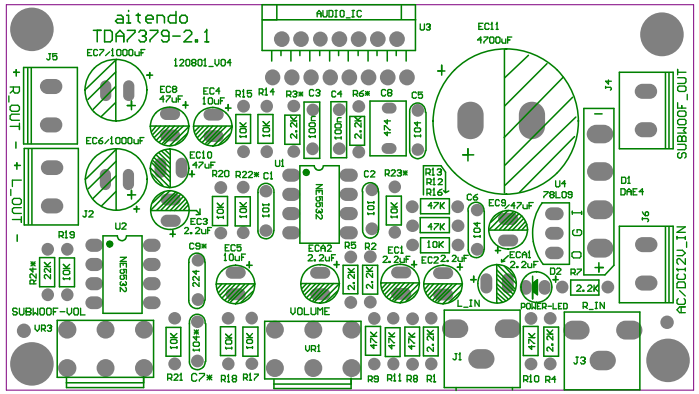
aitendo
TDA7379-2.1
120801_V04
AUDIO_IC
U3
EC11
4700uF
J5
R_OUT
L_OUT
J2
EC7/1000uF
EC6/1000uF
EC8
47uF
EC4
10uF
EC10
47uF
EC3
2.2uF
R15
R14
R3*
C3
C4
R6*
C8
C5
R20
R22*
C1
U1
NE5532
C2
R23*
R13
R12
R16
47K
47K
10K
C6
EC9
47uF
U4
78L09
J4
SUBWOOF_OUT
D1
DAE4
J6
AC/DC12V_IN
R19
U2
R24*
22K
10K
SUBWOOF-VOL
VR3
C9*
EC5
10uF
ECA2
2.2uF
R5
R2
EC1
2.2uF
EC2
2.2uF
ECA1
2.2uF
D2
R7
2.2K
L_IN
POWER-LED
R_IN
VOLUME
VR1
J1
J3
R21
C7*
R18
R17
R9
R11
R8
R1
R10
R4