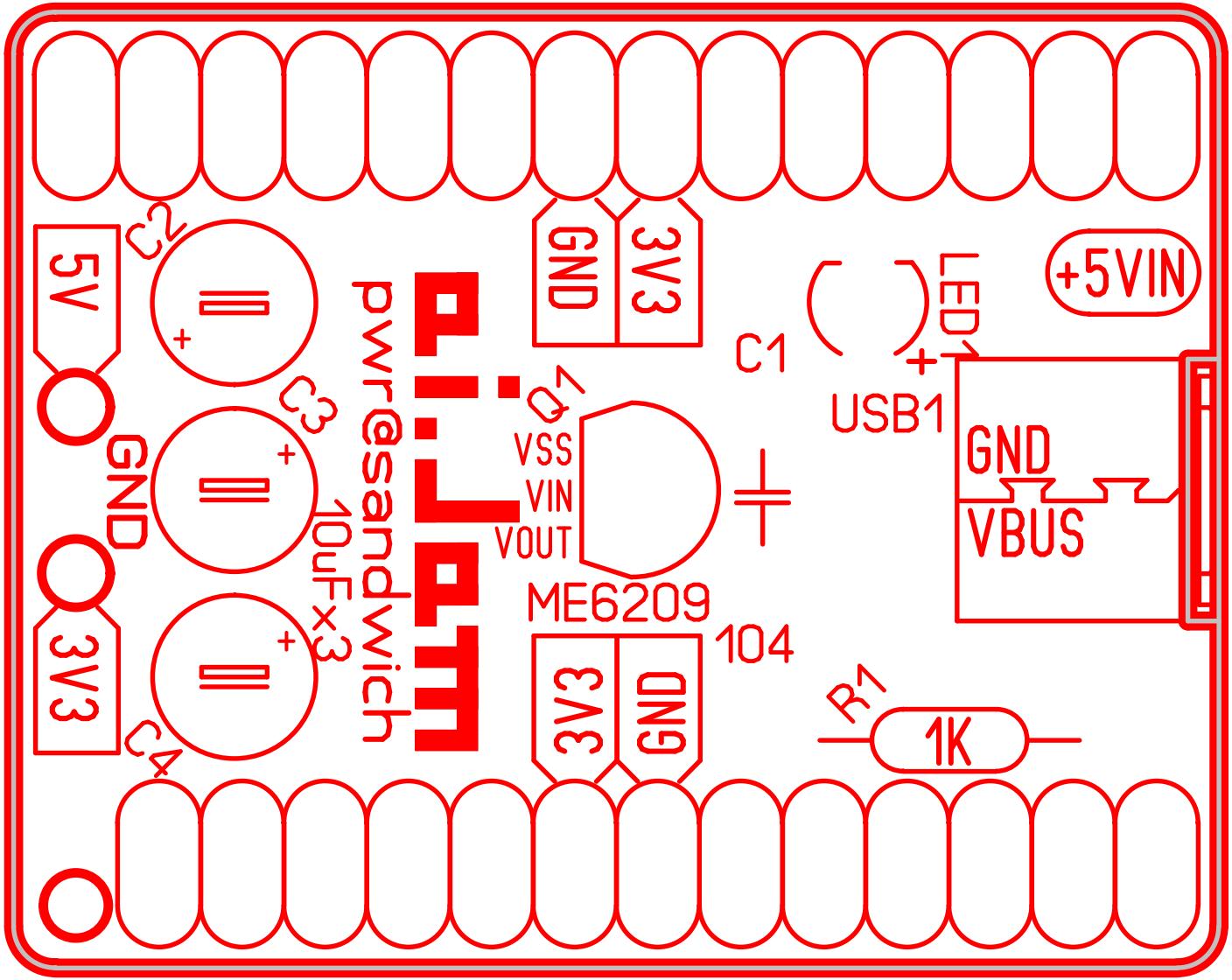
5V
C2
GND
3V3
C3
C4
10uFx3
pwr@sandwich
GND
3V3
Q1
VSS
VIN
VOUT
ME6209
104
3V3
GND
C1
LED1
USB1
+5VIN
GND
VBUS
R1
1K