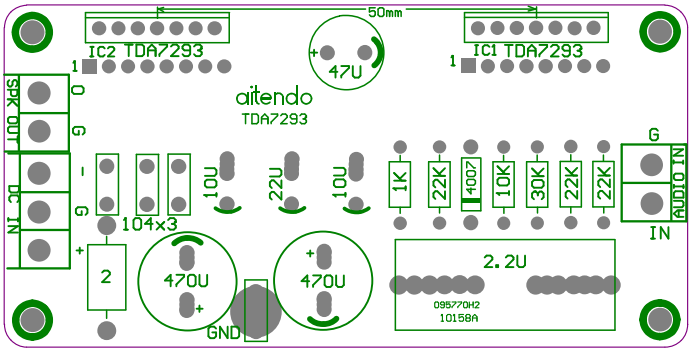
50mm
IC2 TDA7293
IC1 TDA7293
47U
aitendo
TDA7293
SPK OUT
DC IN
G
10U
22U
10U
1K
22K
4007
10K
30K
22K
22K
AUDIO IN
104x3
2
470U
470U
GND
2.2U
095770H2
10158A