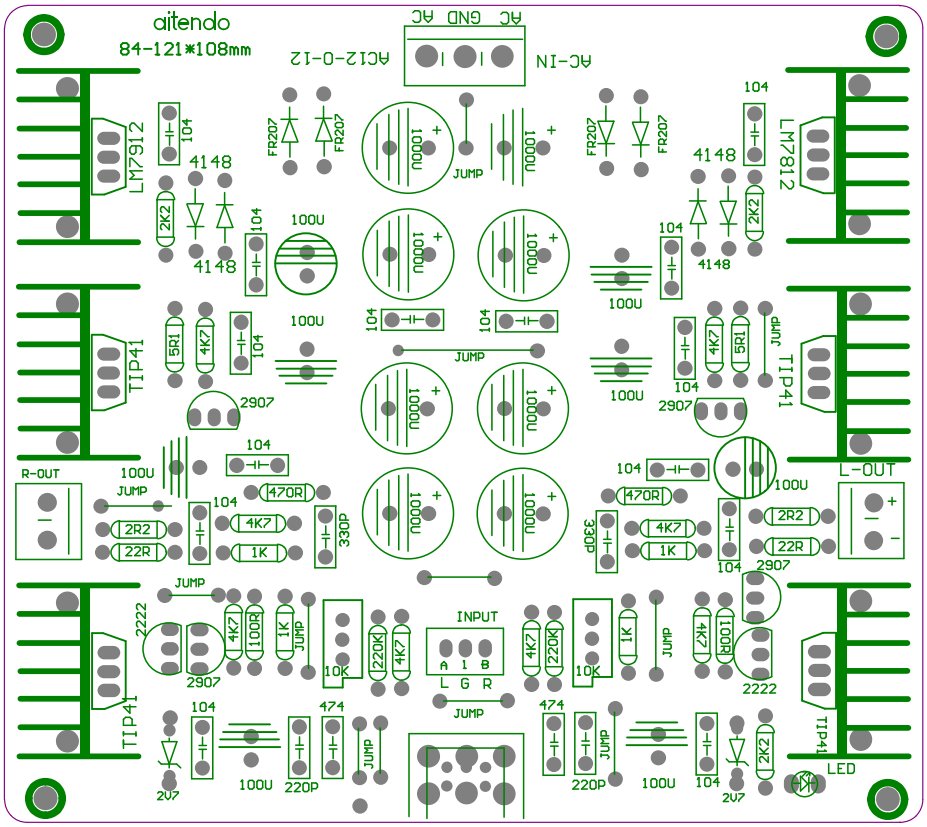
aitendo
84-121*108mm
AC12-0-12
AC GND AC
AC-IN
LM7912
LM7812
TIP41
R-OUT
L-OUT
INPUT
A 1 B
L G R
LED
JUMP
FR207
4148
2907
2222
2K2
5R1
4K7
470R
2R2
22R
1K
100R
220K
10K
330P
220P
474
104
100U
10000U
207