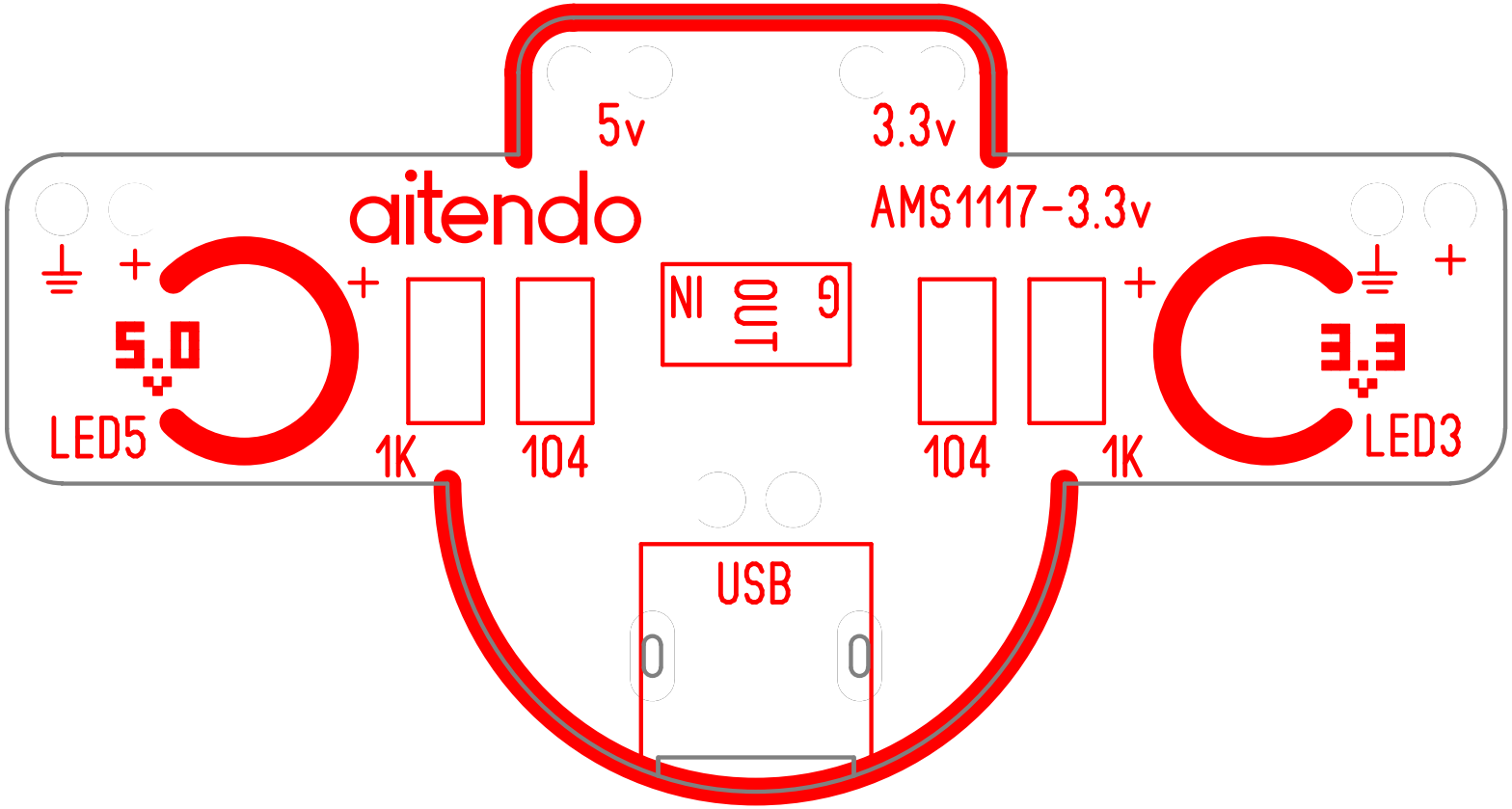
5v
3.3v
aitendo
AMS1117-3.3v
5.0
LED5
1K
104
104
1K
3.3
LED3
USB