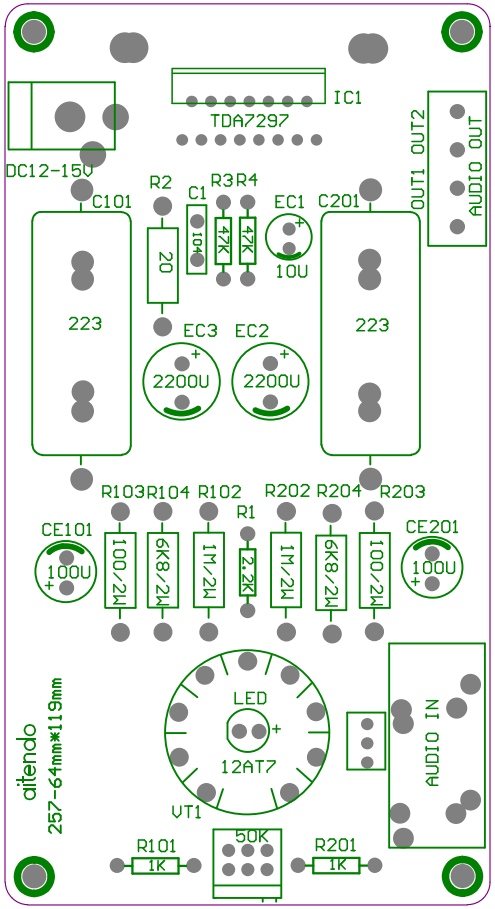
IC1
TDA7297
DC12-15V
OUT1 OUT2
AUDIO OUT
C101
R2
C1
R3 R4
EC1
C201
20
10nF
47K
47K
10U
223
223
EC3
EC2
2200U
2200U
R103 R104 R102
R202 R204 R203
R1
CE101
CE201
100U
100U
100/2W
6K8/2W
1M/2W
2.2K
1M/2W
6K8/2W
100/2W
LED
12AT7
VT1
AUDIO IN
R101
1K
50K
R201
1K
aitendo
257-64mm*119mm