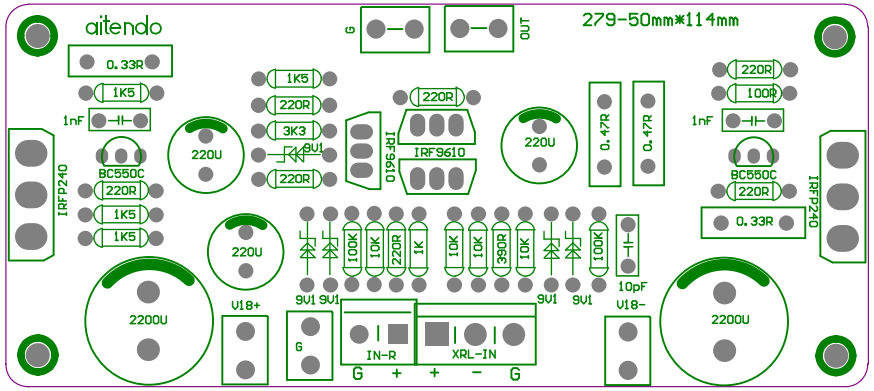
aitendo
279-50mm*114mm
G
OUT
0.33R
1K5
1nF
BC550C
220R
1K5
1K5
IRFP240
220U
1K5
220R
3K3
9V1
220R
IRF9610
IRF9610
220R
220U
0.47R
0.47R
220R
100R
1nF
BC550C
220R
0.33R
IRFP240
220U
100K
10K
220R
1K
10K
10K
390R
10K
100K
10pF
9V1
9V1
9V1
9V1
2200U
V18+
G
IN-R
XRL-IN
G + + - G
V18-
2200U