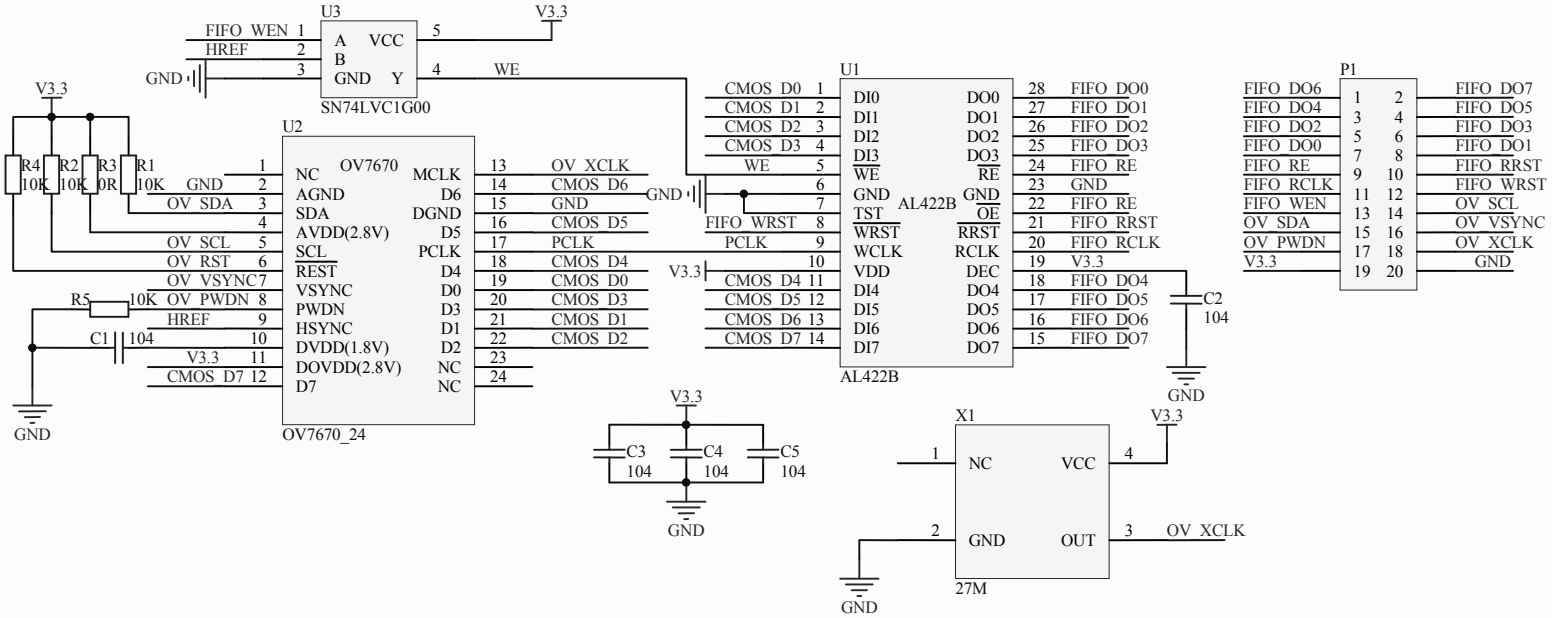

Title	
Size A4	Number
Date: 2010-11-8	Sl
File: F:\ZXB我的PCB库\..\AVRCam.SchDoc	D