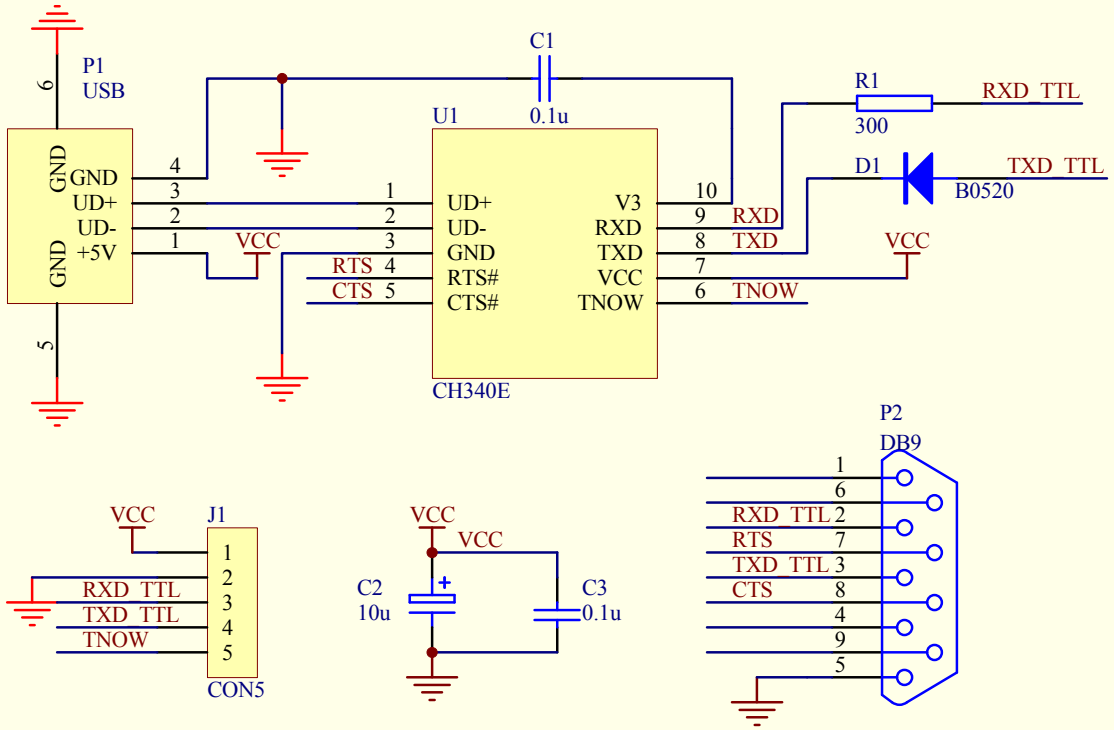

Title		
Size A	Number	Revision
Date: 13-May-2018		Sheet of
File: I:\¤•ï“o¯^\2018-5\CH340PCB\SERIAL\CH340.DDB		Drawn By: