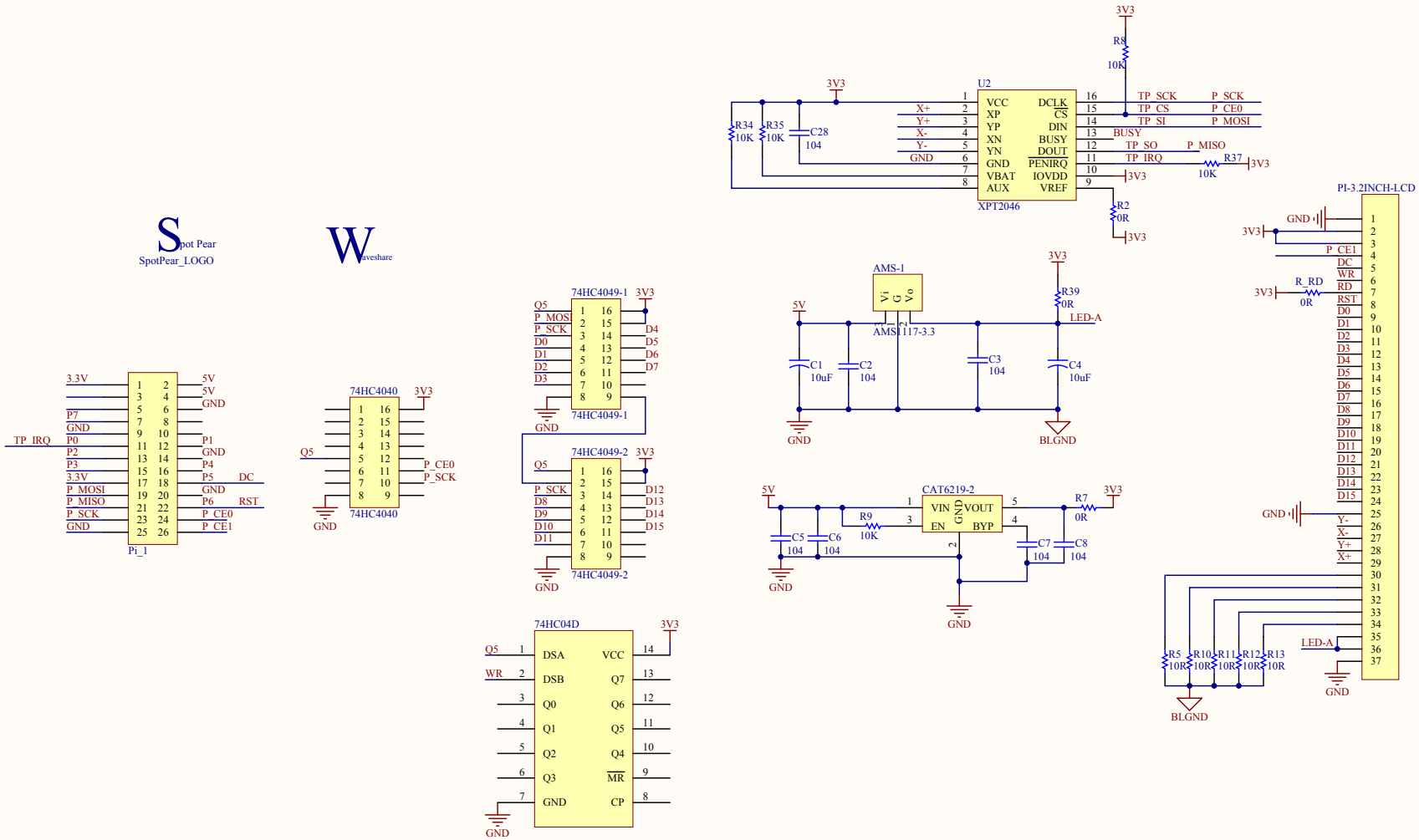

Title		
Size A4	Number	Revision
Date: 2014-10-27		Sheet of
File: E:\PCB\..\3.5inch RPI LCD (A).SchDoc		Drawn By: