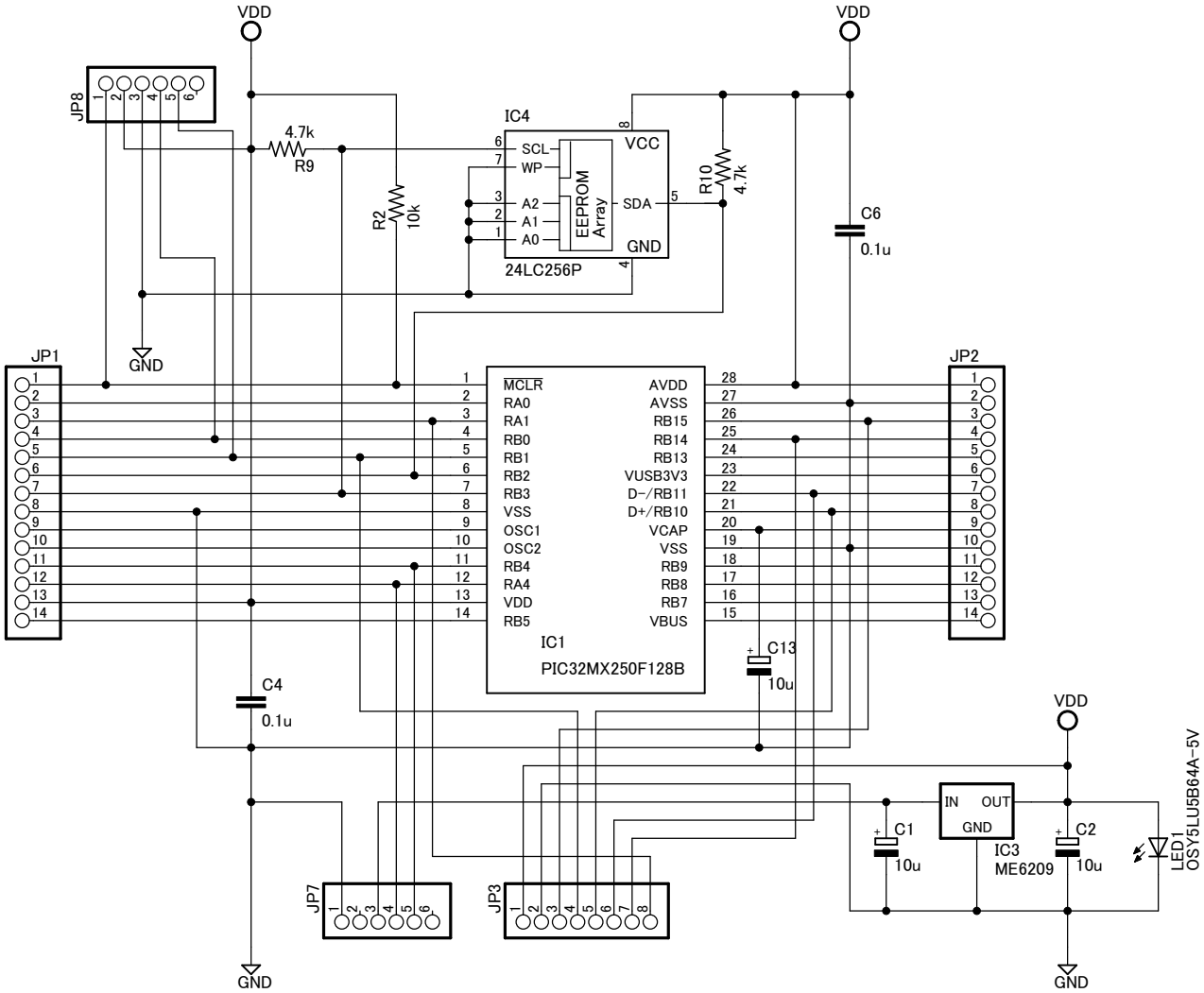
VDD
VDD
JP8
4.7k
R9
R2
10k
IC4
SCL
WP
A2
A1
A0
EEPROM Array
VCC
SDA
GND
24LC256P
R10
4.7k
C6
0.1u
GND
JP1
JP2
MCLR
RA0
RA1
RB0
RB1
RB2
RB3
VSS
OSC1
OSC2
RB4
RA4
VDD
RB5
AVDD
AVSS
RB15
RB14
RB13
VUSB3V3
D-/RB11
D+/RB10
VCAP
VSS
RB9
RB8
RB7
VBUS
IC1
PIC32MX250F128B
C13
10u
C4
0.1u
VDD
IN
OUT
GND
IC3
ME6209
C1
10u
C2
10u
LED1
OSY5LU5B64A-5V
JP7
JP3
GND
GND