REV	LTR	DESCRIPTION	DATE	REVISER	APPD

Process Capable

RoHS Compliant 2002/95/EC

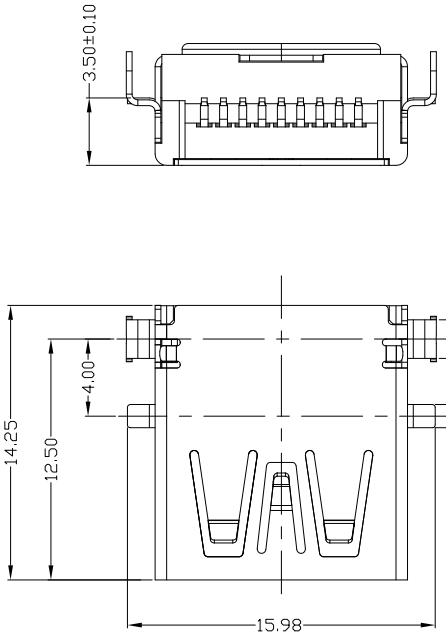

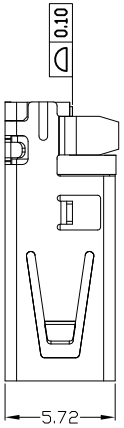

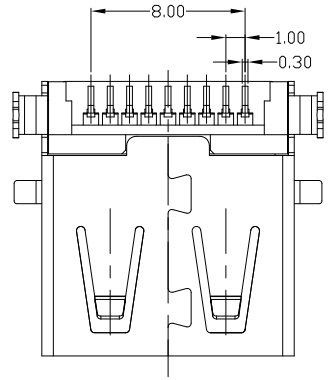

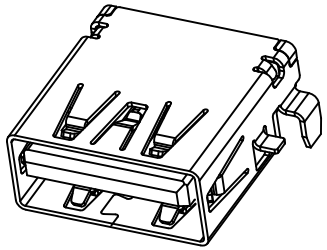

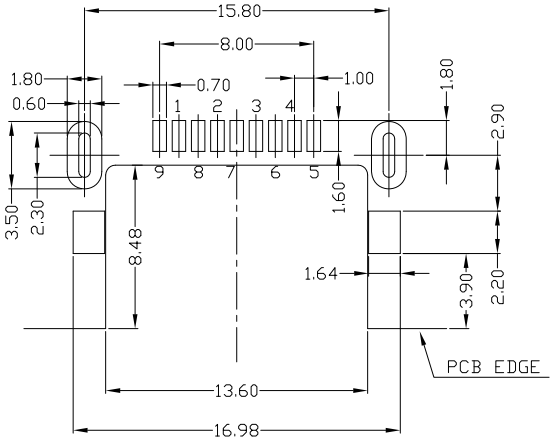

RECOMMENDED PCB LAYOUT

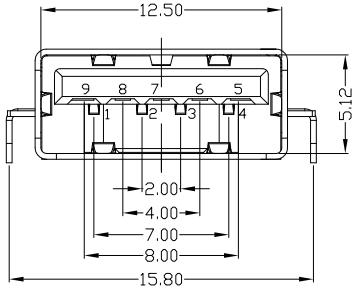

PIN NUMBER	SIGNAL NAME
1	VBUS
2	D-
3	D+
4	GND
5	STDA_SSRX-
6	STDA_SSRX+
7	GND_DRAIN
8	STDA_SSTX-
9	STDA_SSTX+
Shell	Shield

NOTES:

1. ELECTRICAL:
   1) VOLTAGE CURRENT RATING:1.5AMP,30V AC;
   2) INSULATION RESISTANCE: 1000MΩ MIN;
   3) CONTACT RESISTANCE: 30mΩ MAX;
   4) WITHSTANDING VOLTAGE: 500V R.M.S.;
   5) OPERATING TEMPERATURE:-40°C TO +85°C.
2. Mechanical:
   1) Mating Force: 35N MAX
   2) Unmating Force: 10N MIN.
3. NOTE:1.DIMENSIONS MARKED "▼" TO BE CHECKED BY Q.C & IPQC.

4.PART NO.

USAF-095N-4BLVS13

W:WHITE
B:BLACK
BL:BLUE

1:Au 1U"
5:Au 15U"
6:Au 30U"

1:PBT
2:PA6T
3:PA9T
4:LCP

Bill of materials:

NO	PARTS	MATERIAL	QTY	FINISHING
4	HOUSING	LCP+30%GF	1	UL94V-0
3	SHELL	COPPER ALLOY	1	PLATED NICKEL
2	TERMINAL1	COPPER ALLOY	4	PLATED GOLD/TIN
1	TERMINAL2	COPPER ALLOY	5	PLATED GOLD/TIN

X. ±0.35	X.° ±2°	UNITS	mm
.X ±0.3	.X° ±1°	MAT'L	SEE NOTE
.XX ±0.25	.XX°		
.XXX ±0.15	.XXX°	FINISH	SEE NOTE
		Q'TY	

THESE DRAWINGS AND SPECIFICATIONS ARE THE PROPERTY OF ACCURATE INNOTECH INC.
AND SHALL NOT BE REPRODUCED, COPIED OR USED IN ANY MANNER WITHOUT THE PRIOR WRITTEN CONSENT OF ACCURATE INNOTECH INC

雅安科技有限公司
ACCURATE INNOTECH INC.

TITLE: USB 3.0 AF SMT沉板式 H3.5无卷边方脚

PART NO.: USAF-095N-4BLVS13

DR: gan 2013/3/6

CHKD: gan 2013/3/6

APPD:

DWG NO.: AII-VS13

SCALE	SHEET	REV.	
1:1	1/1	B	CUSTOMER DRAWING