REV.	MATTER	APP.	DATE
B	添加标注尺寸	张艳美	2009-12-17

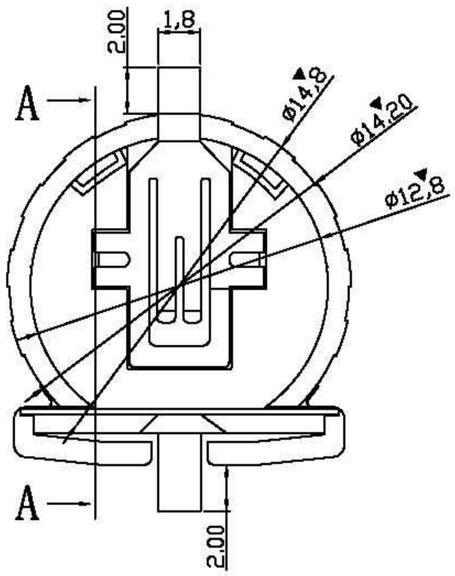

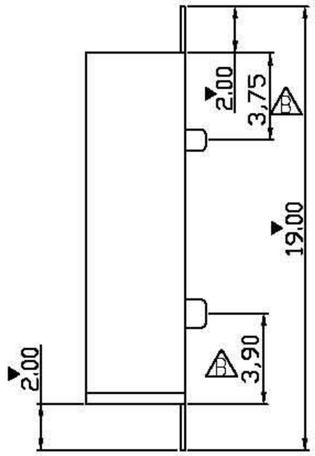

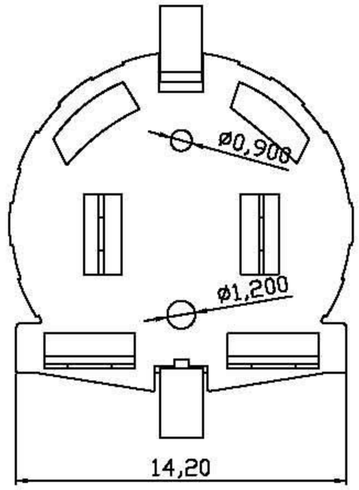

NOTE:
1.MATERIAL:
a.HOUSING:THERMOPLASTIC GLASS FIBRE UL94V-0
b.CONTACT:PHOSPHOR BRONZE
(SURFACE PLATING: Au*u")
SEE ORDERING INFORMATION
2.ELECTRIC:
a.CONTACT RESISTANCE: 30 MILLIOHMS MAX
b.INSULATION RESISTANCE: 1000 MEGA OHMS MIN
c.DIELECTNIC VOLTAGE: 750V AC ONE SEC LEVEL
d.OPERATING TEMPERATURE: -55° C~ +85° C

ORDERING INFORMATION

BS-12-C**0*013

- 电池座系列
- BS-1220系列
- SMT TYPE
- MATERIAL:
  - 1A-PBT WHITE
  - 1B-PBT BLACK
  - 2A-PA66 WHITE
  - 2B-PA66 BLACK
  - 6A-PPS WHITE
  - 6B-PPS BLACK
  - 6C-PPS BROWN
- PLATING:
  - A-Au1U"
  - B-Au3U"
  - C-Au5U"
  - E-Au15U"
  - J-Sn100U"~120U"
  - K-Sn150U"
- CRUST:
  - 0-WITHOUT

注: ▼为重点管控尺寸

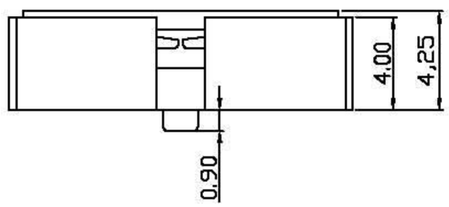

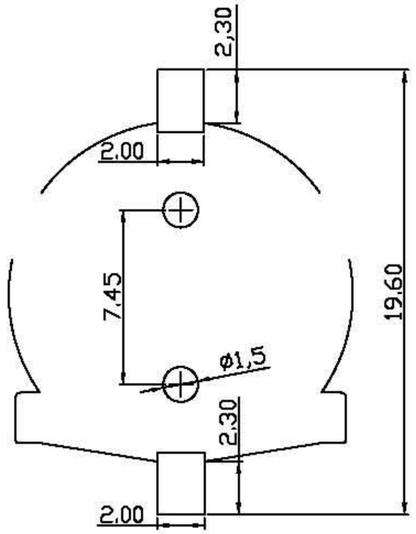

PCB LAYOUT

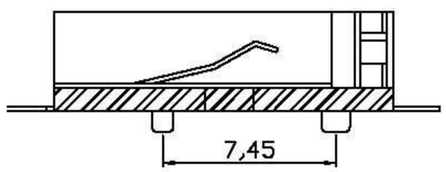

SECTION A A-

深圳市迈洛克实业有限公司

TOLERANCE		DRAWN	UNIT: MM	TITLE: 两PIN电池座卧式SMT（BS-1220-2）	
LINEAR	ANGLE	APPROVED	SCALE: 1/1	PART NO. BS013-00	REV. B
x. ±1 .x ±0.38 .xx ±0.20 .xxx ±0.10	x.° ±5° .x° ±2° .xx° ±1°	DATE 2009.12.17	SIZE: A4	DWG. NO. BS013-00	SHEET. 1 OF 1