REMOTE CONTROL CHIP

Dual chanel

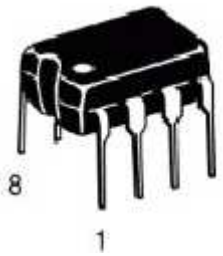

DESCRIPTION

A CMOS designed chip, RX-3E can be used for remote controlling, such as car and toy applications. The RX-3 use 2-keys to produce, forward, backward or on/off, 3-status motor actions.

FEATURES

*Wide operating voltage range (Vcc=2.2~12V)

*Few external components are needed.

*Typical oscillator frequency 76KHz

*RX-3E built-in Zener 3.6V

ORDERING INFORMATION

Part No.	Package
RX-3E	DIP-8-300-2.54

PIN ASSIGNMENT

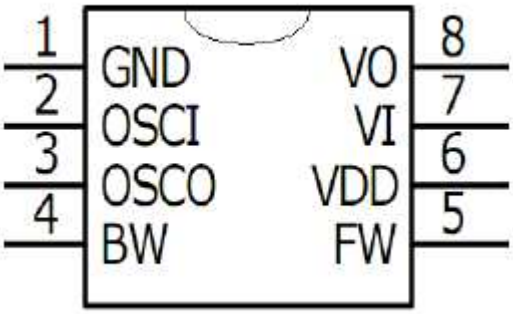

BLOCK DIAGRAM

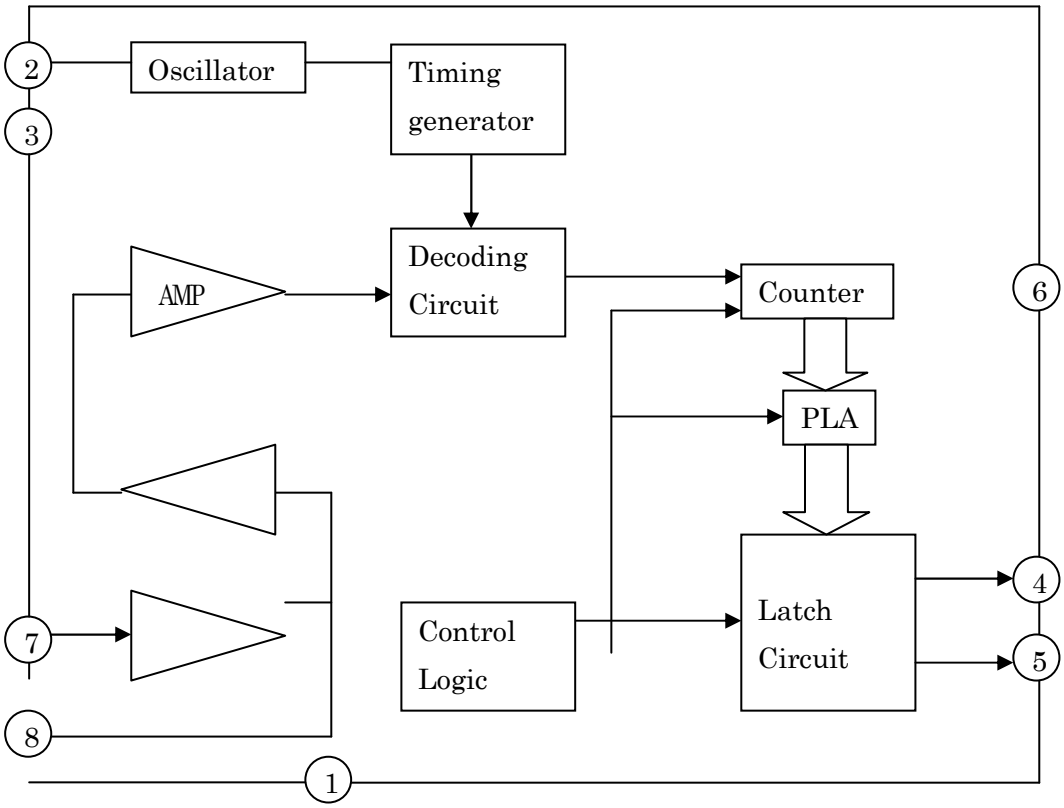

1.GND 2.OSCI

3.OSCO 4.BACK

5.FOWER 6.VDD

7.VI1 8.VO1

PIN DESCRIPTION

Pin No.	Symbol	Description
1	GND	Ground
2	OSCI	Oscillator input pin
3	OSCO	Oscillator output pin
4	BACKWARD	Backward output pin
5	FORWARD	Forward output pin
6	VDD	Power supply
7	VI1	Inverter 1 input pin for signal amplify
8	VO1	Inverter 1 output pin for signal amplify

ABSOLUTE MAXIMUM RATINGS

Characteristic	Symbol	Value	Unit
Supply Voltage	VDC	0.3~15	V
Input/Output Voltage	VI/O	GND-0.3~VDD+0.3	V
Operating Temperature	TOPR	-10~60	°C
Storage Temperature	TSTG	-25~125	°C

ELECTRICAL CHARACTERISTICS

(VDD=6.0V,Fosc=76KHz, Tamb = 25°C)

Parameter	Symbol	Min	Typ	Max	Unit
Operating Voltage	VDD	2.2	6.0	12	V
Operating Current	Idd	----	8	----	mA
O/P Driving Current	Idrive	3	----	----	mA
Effect Decoding Frequency Variation	Tolerance	-20%	----	20%	----

DATA FORMAT

Forward Signal: F1=1kHz

Backward Signal: F2=250Hz

TYPICAL APPLICATION CIRCUIT

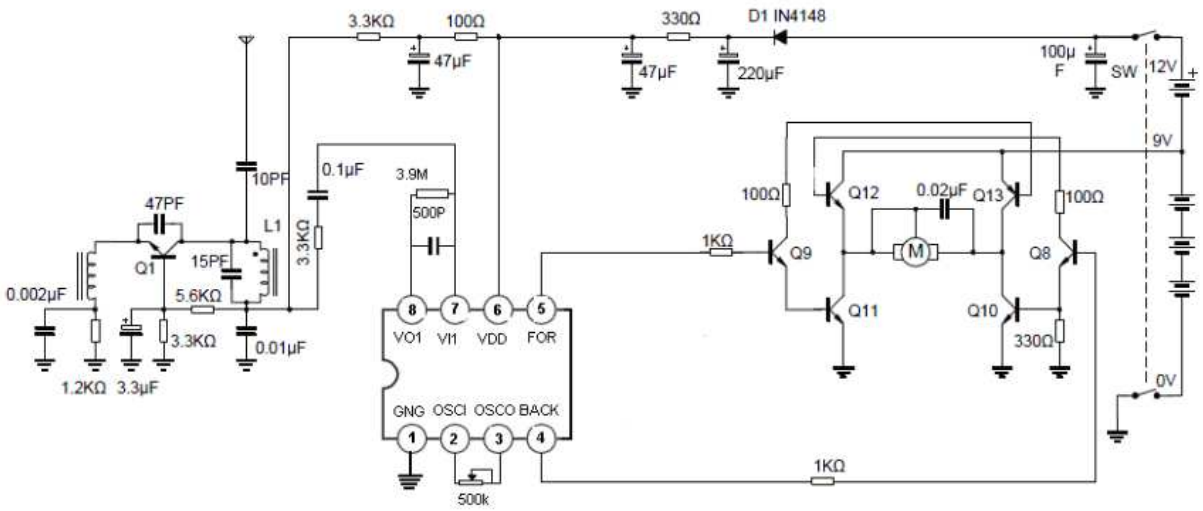

PACKAGE OUTLINE
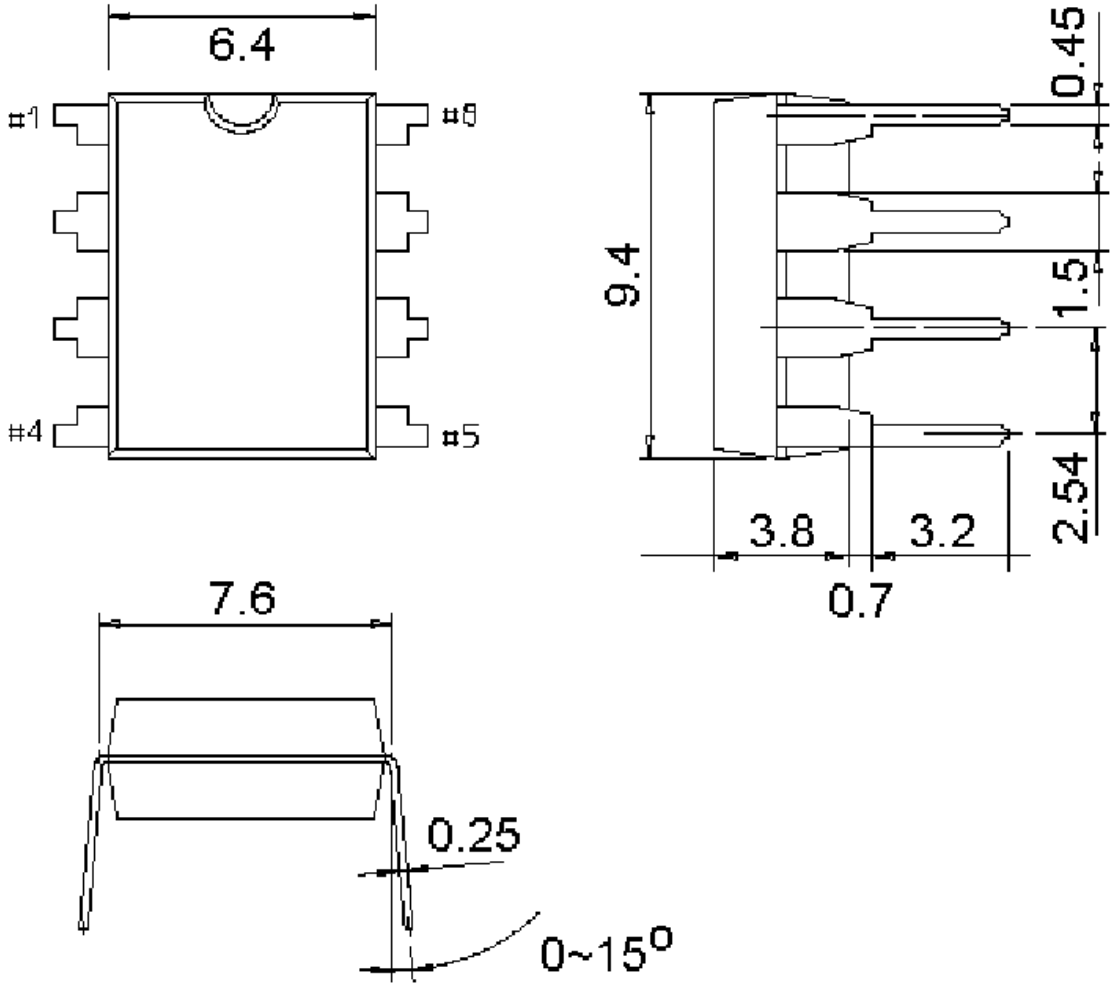
UINT:mm