由 Autodesk 教育版产品制作

	REVISION DESCRIPTION	CHECK	APP	DATE	REV.NOTICE.NO
△1					
△2					
△3					

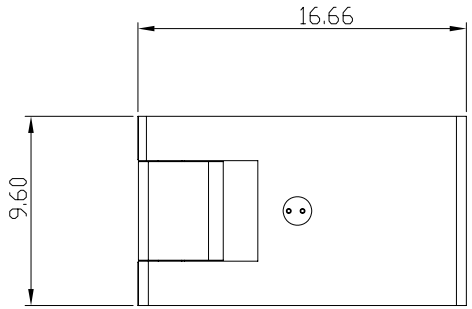

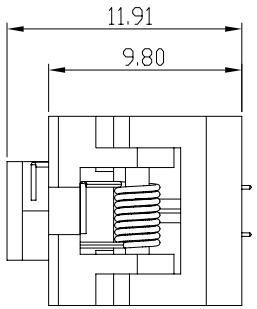

PCB Pattern(TOP View)

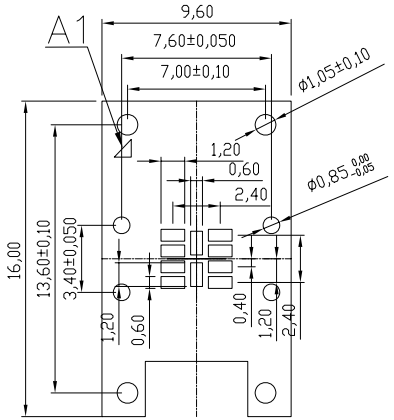

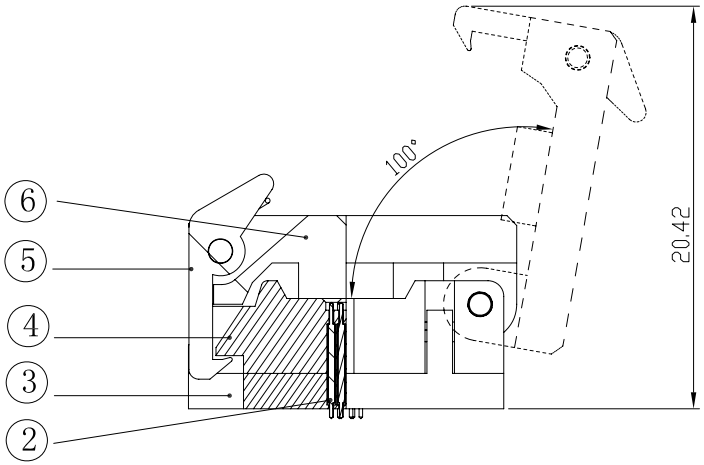

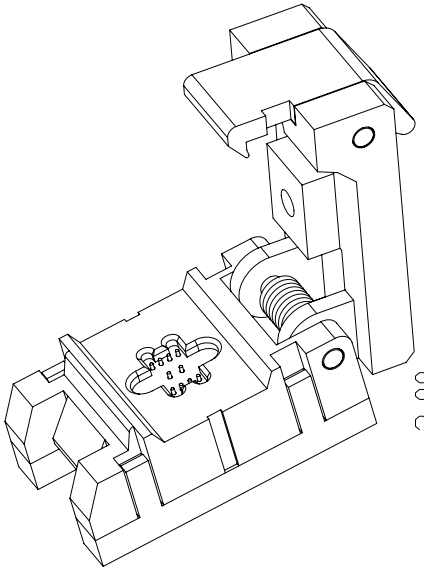

Applicable IC

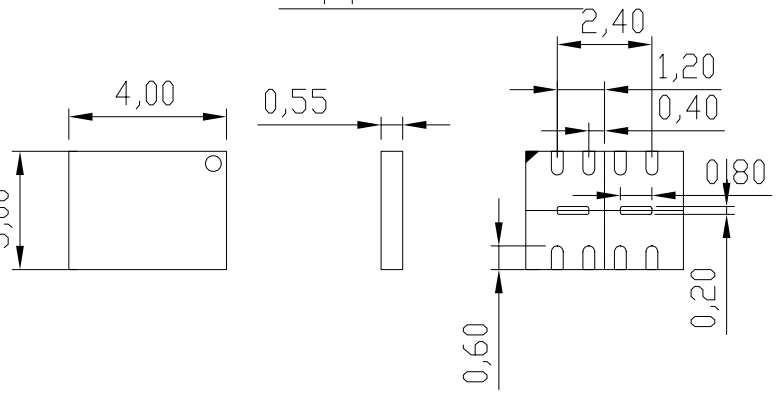

TOP VIEW SIDE VIEW BOTTOM VIEW

PERFORMANCE

1、Insulation Resistance: 1000MΩ Min.At DC 500V
2、Dielectric Withstanding Voltage For 1 Minute At AC 700V
3、Contact Resistance 80mΩ MAX。at 10mA and 20mV MAX.(Initial)
4、Current Rating: 1A max.
5、Operation Temperature -20°C ~+80°C
6、Life Span 100,000 Times (Mechanical)

No	Part Number	Name	Material	Q/ty	Note
6	JZ01-04	COVER	PEI	1	BLACK
5	JZ01-03	LATCH	PEI	1	BLACK
4	JZ01-02	BASE	PEI	1	BLACK
3	JZ01-01	CORE	PEI	1	BLACK
2	JZ01-TZ	POGO PIN	BeCu	8	Au PLATING

PROJECTION		GENERAL TOLERANCES	±0.10	TITLE	CXPQFN8-0.8 SOCKET
		REV	A	CLASS	CXPQFN8-0.8-CP02NT
DIMENSION:	mm	SCALE:	1:1	DRW. NO	QFN-0.8-(4X3)
APP:		DATE:			
CHECK:		DATE:			
DEGK:	ENG03	DATE:	20160113		

由 Autodesk 教育版产品制作