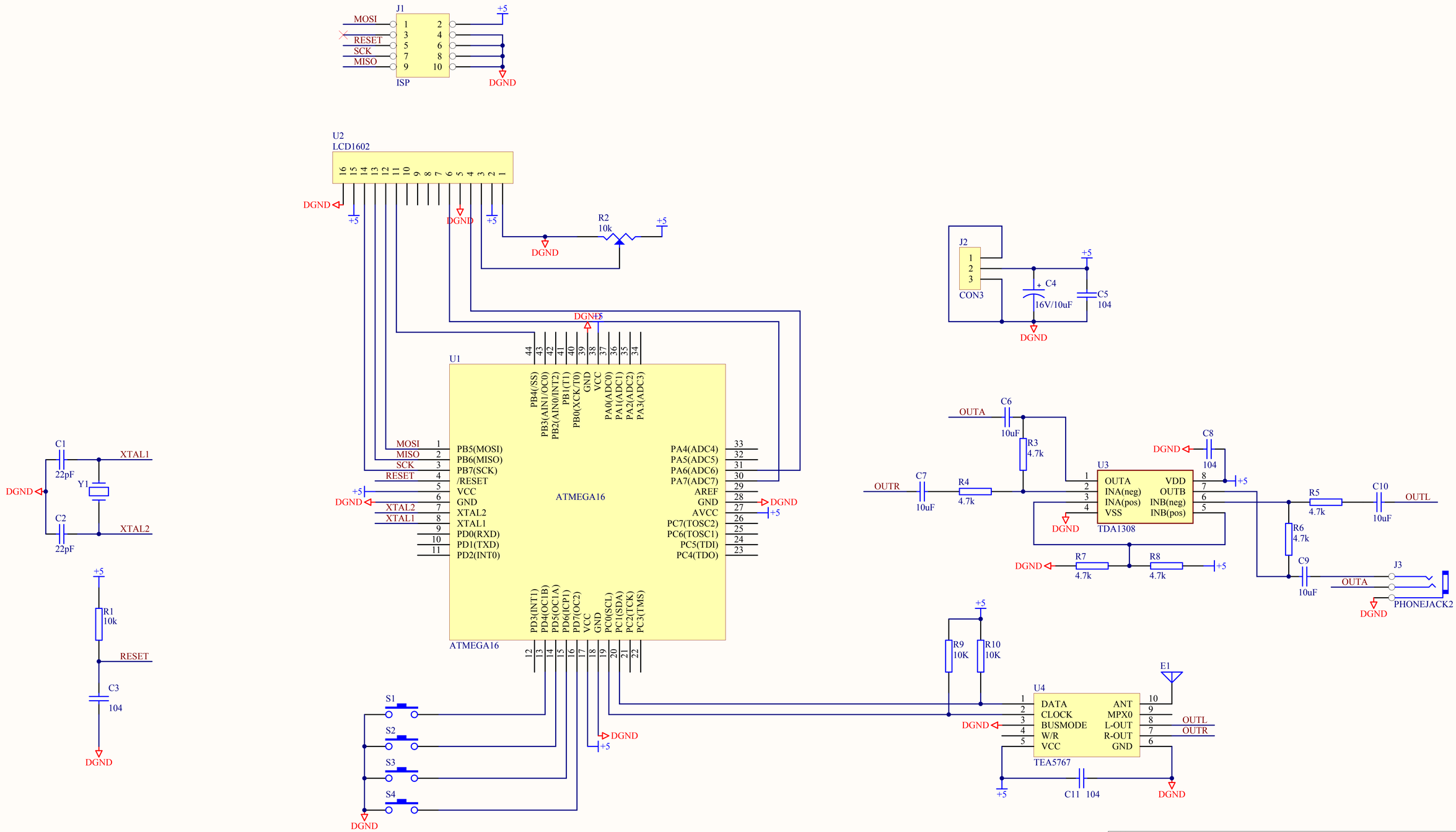

Title		
Size B	Number	Revision
Date: 2010/6/18		Sheet of
File: E:\Temp\FM.Sch		Drawn By: