	REVISION DESCRIPTION	CHECK	APP	DATE	REV.NOTICE.NO
△1					
△2					
△3					

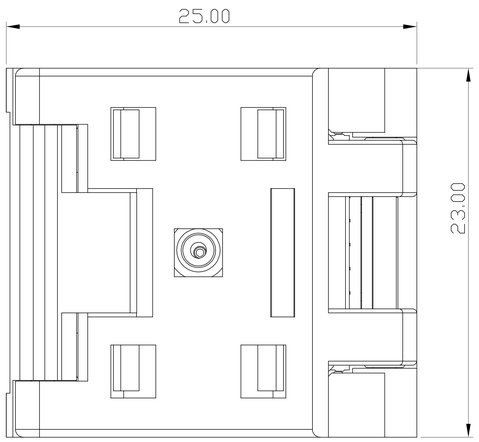

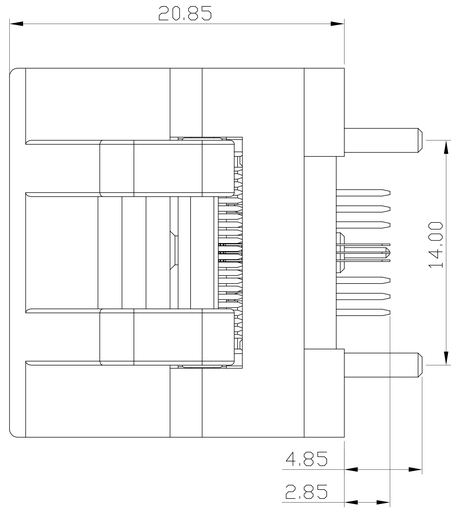

PCB Pattern(TOP View)

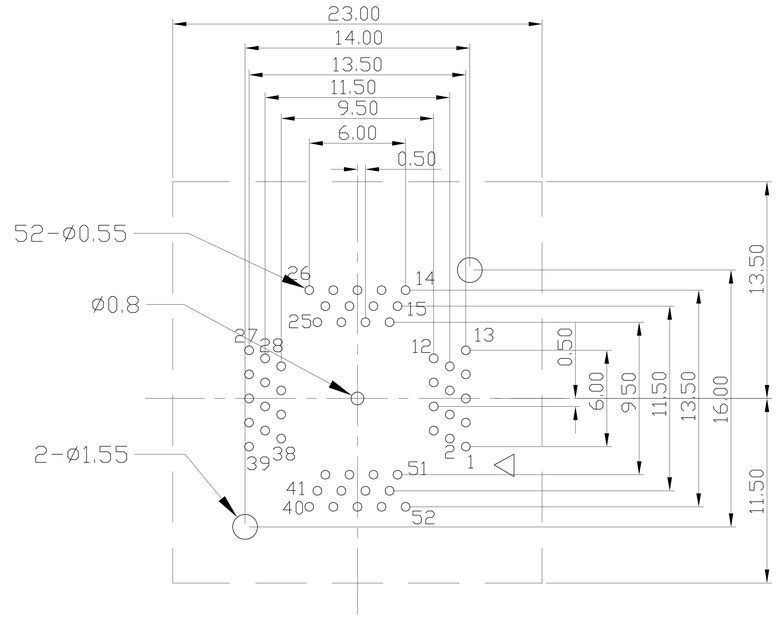

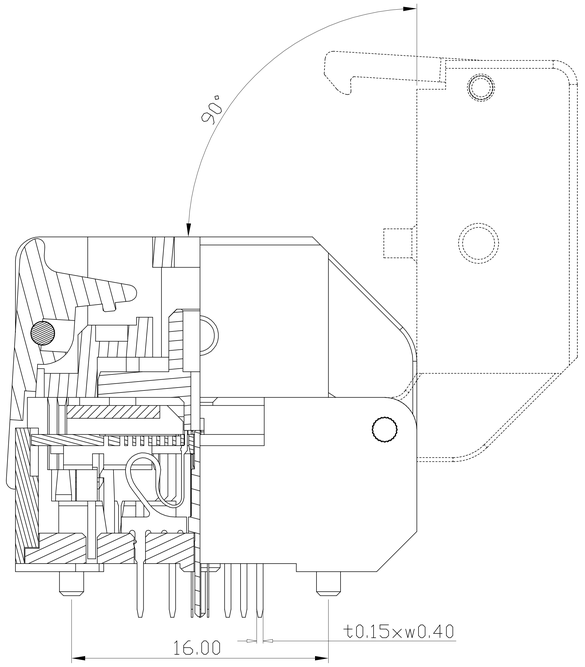

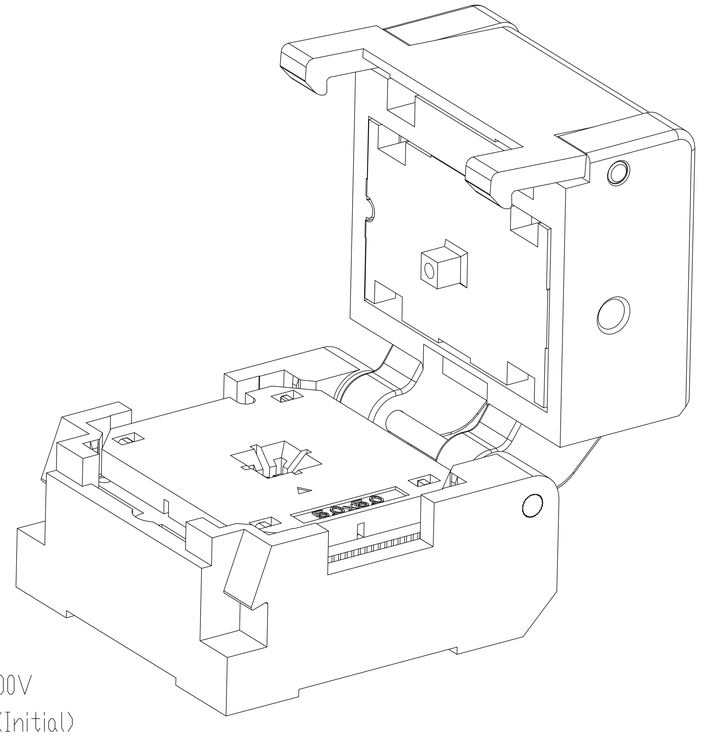

Applicable IC

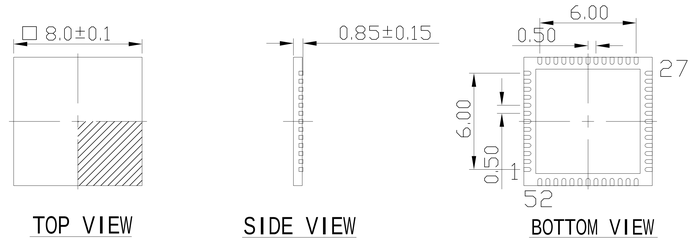

PERFORMANCE

1、Insulation Resistance: 1000MΩ Min.At DC 500V
2、Dielectric Withstanding Voltage For 1 Minute At AC 700V
3、Contact Resistance 30mΩ MAX。at 10mA and 20mV MAX.(Initial)
4、Current Rating: 1A max.
5、Operation Temperature -40°C ~+155°C
6、Life Span 15,000 Times (Mechanical)
7、Operation Force 2.0 Kg MAX

TOLERANCE	PROJECTION	GENERAL TOLERANCES	±0.10	TITLE	QFN52-0.5 SOCKET
		R E V	A	CLASS	QFN52-0.5-CP01GT
X. ±0.50	DIMENSION: mm	SCALE:	1:1	DRW.NO	6U-PWQFN-0.5-52-8X8-01
X.X ±0.25	APP:	DATE:		HMILU	
X.XX ±0.10	CHECK:	DATE:			
X.XXX ±0.05	DEGK: ENG03	DATE: 20150606			