	REVISION DESCRIPTION	CHECK	APP	DATE	REV.NOTICE.NO
△1					
△2					
△3					

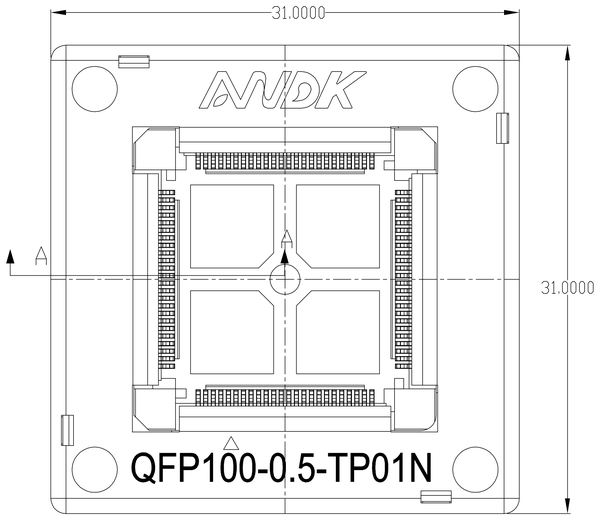

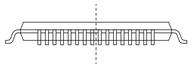

Insertion

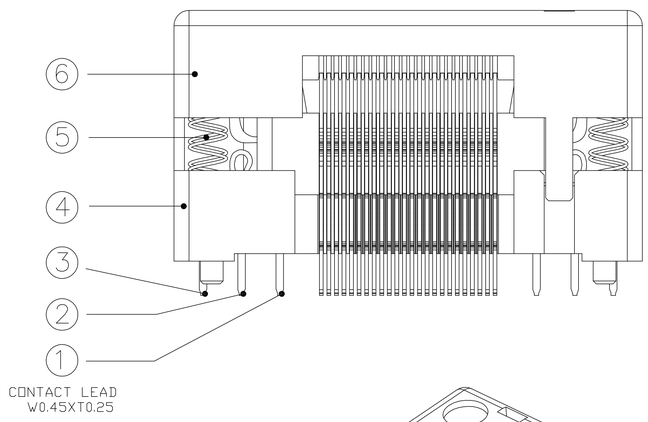

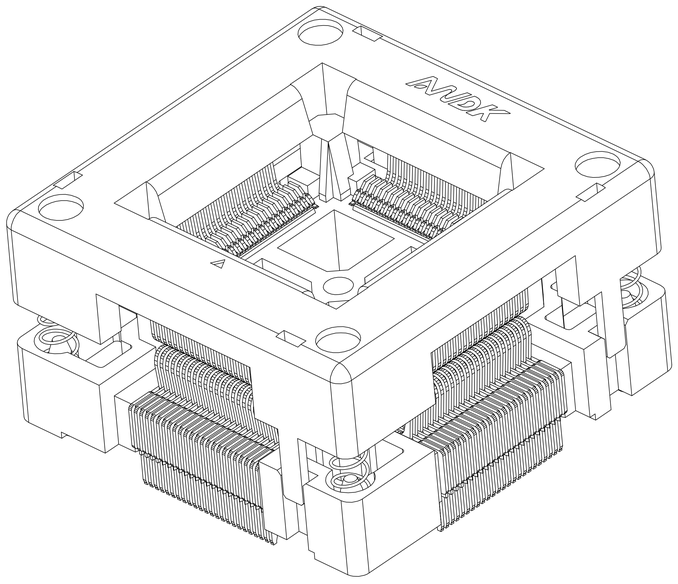

APPL ICABLE IC

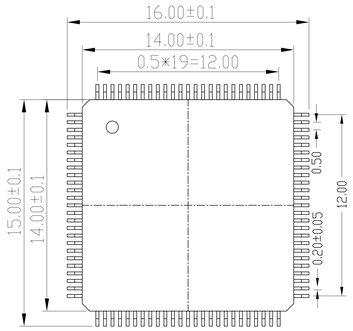

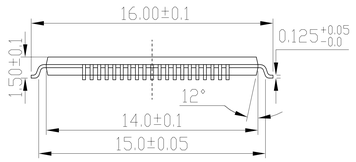

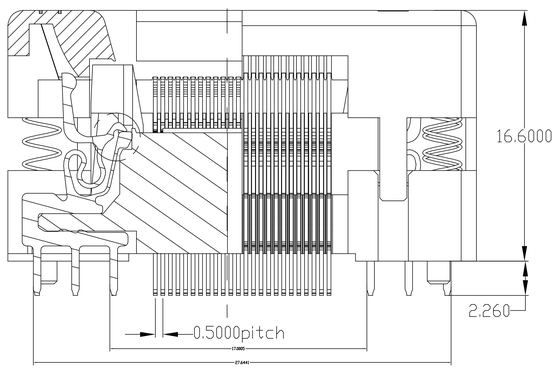

截面A-A

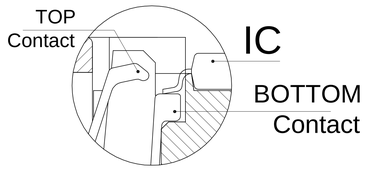

CONTAC TIP DETAIL

PCB PATTERN (TOP VIEW)

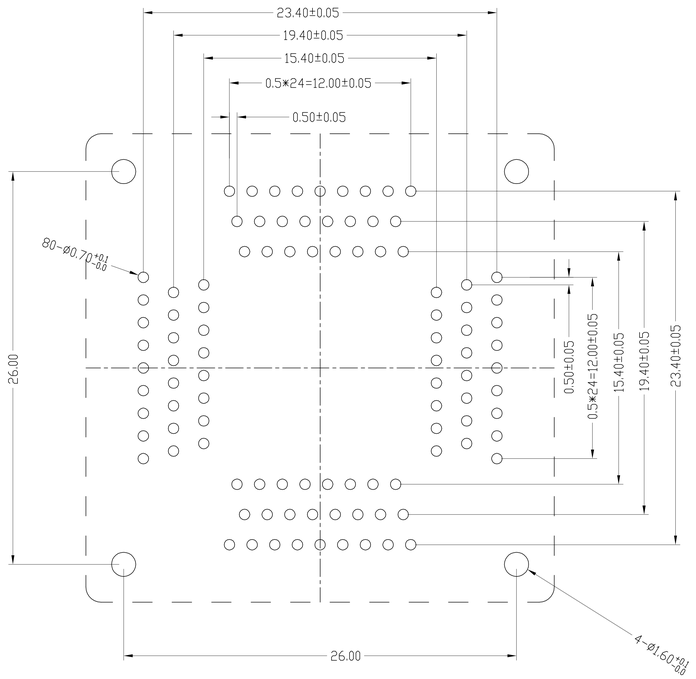

PERFORMANCE

1、Insulation Resistance: 1000MΩ Min.At DC 500V
2、Dielectric Withstanding Voltage For 1 Minute At AC500V
3、Contact Resistance(Initial) 100mΩ MAX at 10mA
4、Rated Current: 1.0A.
5、Operation Temperature range -65°C ~+150°C
6、Terminal strength against pulling 0.5Kg(1min)
7、Insertion Min10000 cycle (Mechanical)
8、Material: Body:PAI,PES; Contact:BeCu,Au plating(Ni-base)

No	Part Number	Name	Material	Q/ty	Note
6	QFP64-0.5-XCR	COVER	PEI/PES	1	BLACK
5	30-B-4515X	SPRING	SUS	4	FOR COVER
4	QFP64-0.5-XBY	BODY	PEI/PES	1	BLACK
3	QFP64-0.5-XCTC	CONTACT	BeCu	36	FOR COVER
2	QFP64-0.5-XCTB	CONTACT	BeCu	32	BLACK
1	QFP64-0.5-XCTA	CONTACT	BeCu	32	Au PLATING

PROJECTION	GENERAL TOLERANCES	±0.10	TITLE: QFP100-0.5 SOCKET
	REV	A	CLASS: QFP100-0.5-TP01N
DIMENSION: mm	SCALE: 1:1		DRW.NO: 04
APP:	DATE:		
CHECK:	DATE:		
DEGK: ENG03	DATE: 20141217		