TAT ELECTRONICSCO.,LTD

DS1010

IR Receiver Modules for Remote Control Systems

Description

The DS 1010 is remote control receiver modules.
Pin diode and receiver IC are assembled on one module.
Small-sized, light-weight, and low current consumption.
modules have been achieved by using resin mold.
The demodulated output signal can directly be decoded by a microprocessor. The main benefit is the reliable function even in disturbed ambient and the protection against uncontrolled output pulses.

Dimensions

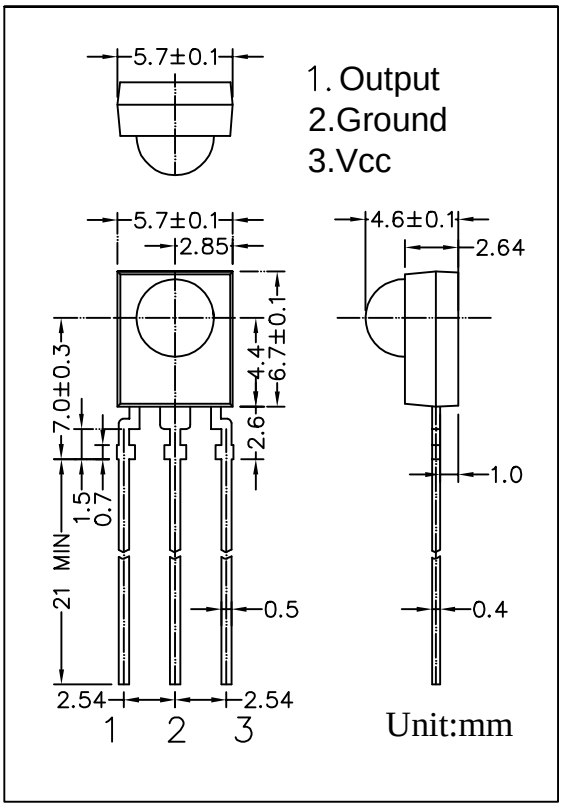

Features

- ◆Supply Voltage Range: 2.7V to 5.5 V
- ◆TTL and CMOS compatibility
- ◆Photo detector and preamplifier in one package.
- ◆Internal filter for PCM frequency
- ◆Output active low
- ◆Enhanced Immunity against all kinds of disturbance light
- ◆No occurrence of disturbance pulses at output pin with in nominal conditions.
- ◆Short settling time after power On.
- ◆Meet RoHS

Applications

- ◆Audio video applications
- ◆Home appliances
- ◆Toy applications
- ◆Remote control equipment

Application Circuit

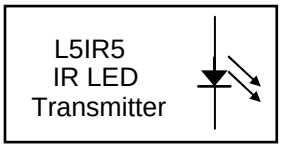

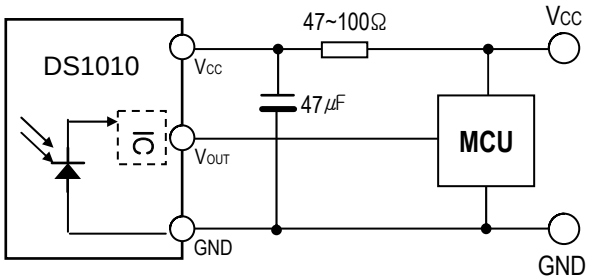

R-C filter recommended to suppress power supply disturbances.
R-C filter should be connected closely between Vcc pin and GND pin.

Block Diagram

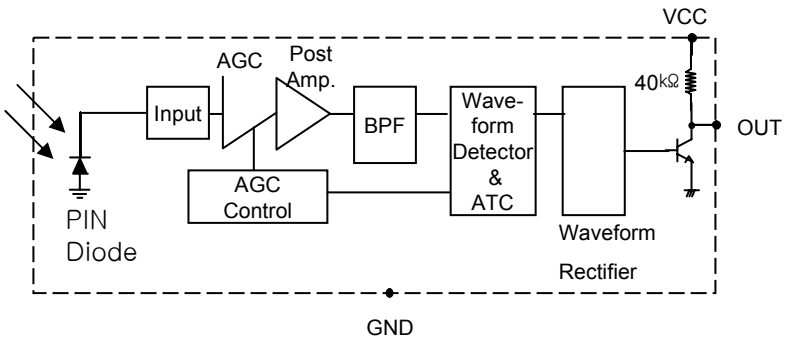

Recommended Operating Conditions

(Ta = 25℃)

Parameter	Symbol	Min.	Typ.	Max.	Unit	Conditions
Operating Voltage	Vcc	2.7	5.0	5.5	V	
Input Frequency	fin	30	37.9	60	kHz	
Operating Temperature	Top	-20	25	80	℃	

Absolute Maximum Ratings

(Ta = 25℃)

Parameter	Symbol	Min.	Max.	Unit	Conditions
Supply Voltage	Vcc	0	6.0	V	
Output Voltage	Vout	0	6.0	V	
Output Current	Iout	0	2.5	mA	
Storage Temperature	Tst	-20	80	℃	
Soldering Temperature	Tsd	260℃±5℃		℃	Max 5 sec

Electro-optical Characteristics

Specifications hold over the Recommended Operating Conditions, unless otherwise noted herein.
All values are at **25℃** and **Vcc=3.0V/5.0V**

(Ta = 25℃)

Parameter	Symbol	Min.	Typ.	Max.	Unit	Conditions
Supply Current	Icc	--	0.9	1.5	mA	Iin=0 μA, Vcc=3V
			1.0	1.5	mA	Iin=0 μA, Vcc=5V
Max. Voltage gain	Av	75	80	85	dB	fin=37.9kHz, Vin=30μVp-p
BPF Bandwidth	f_{BW}	3.5	6.0	8.5	kHz	-3dB Bandwidth Vin=30μVp-p
Output pulse width	t_{PW1}	500	-	800	μs	fin=37.9kHz, burst wave Vin=500 μVp-p note*1
	t_{PW2}	500	-	800	μs	fin=37.9kHz, burst wave Vin= 50mVp-p note*1
Low level output voltage	V_{OL}	-	0.2	0.4	V	Isink=2.0mA
High level output voltage	V_{OH}	2.7	3.0	-	V	Vcc=3V
		4.7	5.0	-	V	Vcc=5V

[Fig. 1] Data Signal diagram

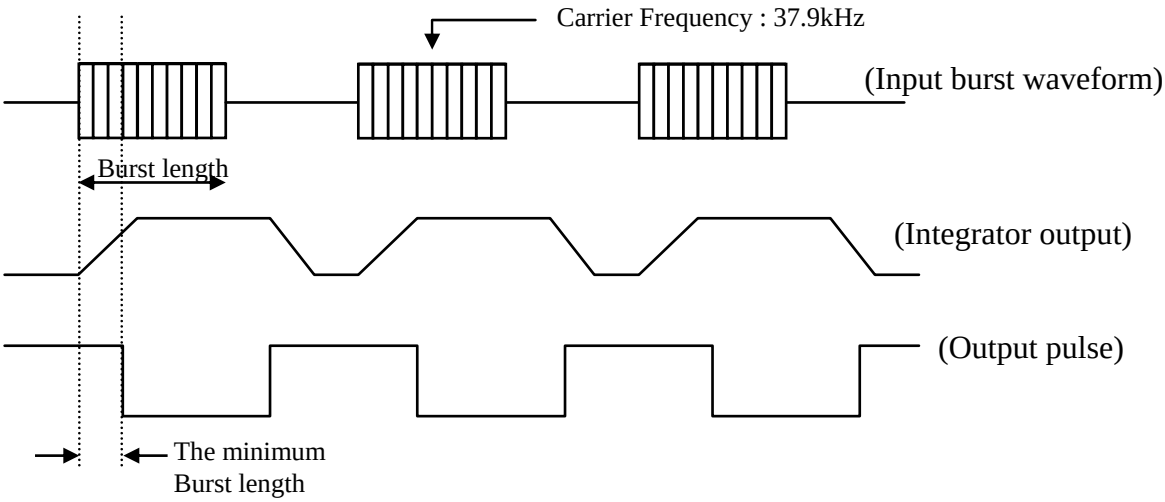

[Fig.2] Transmitter

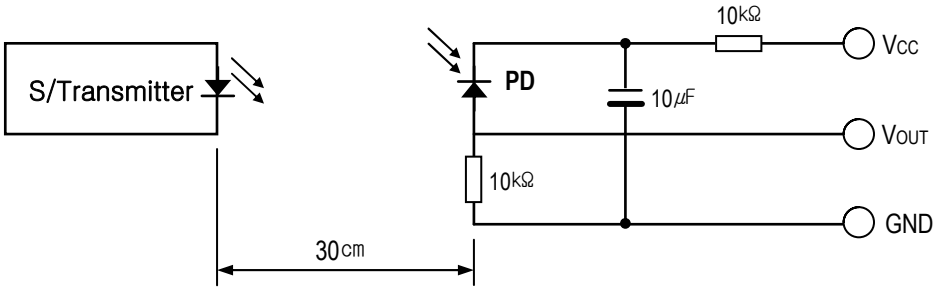

[Fig.3] Test condition of arrival distance

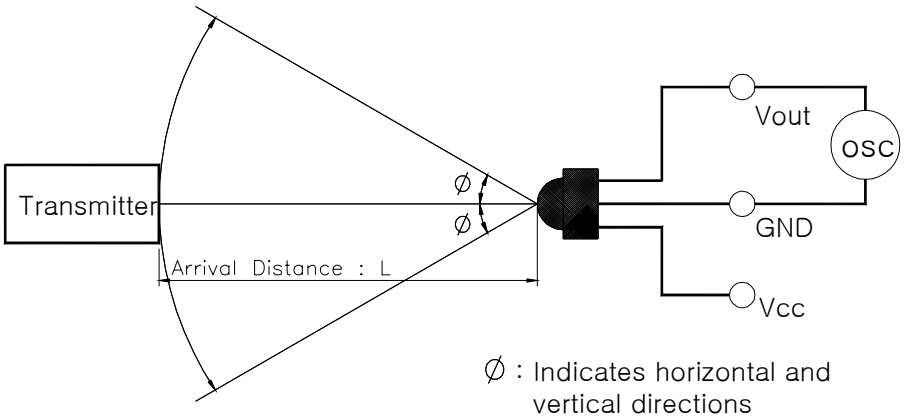

[Measurement condition for arrival distance]

Ambient light source : Detecting surface illumination shall be irradiate 200±50Lux under ordinary white fluorescence lamp without high frequency lighting

Electrical/Optical Characteristics

[Fig.4] Supply Current vs. Voltage

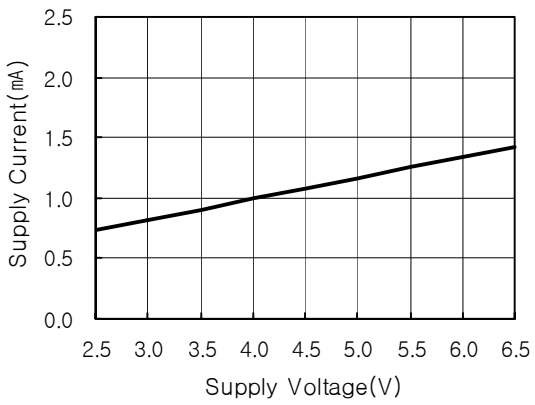

[Fig.5] Sensitivity vs. Supply Voltage

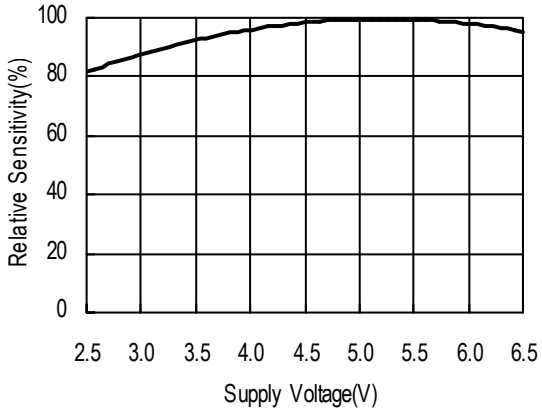

[Fig.6] Output Pulse Width vs. Distance

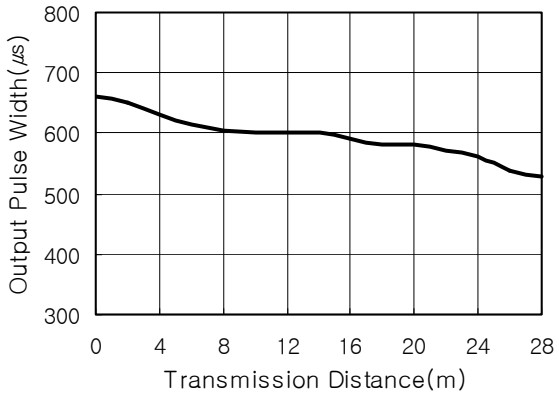

[Fig.7] Directivity (Horizontal)

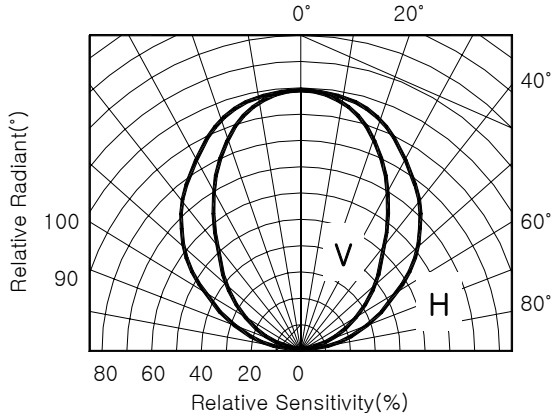

[Fig.8] BPF Fc Curve

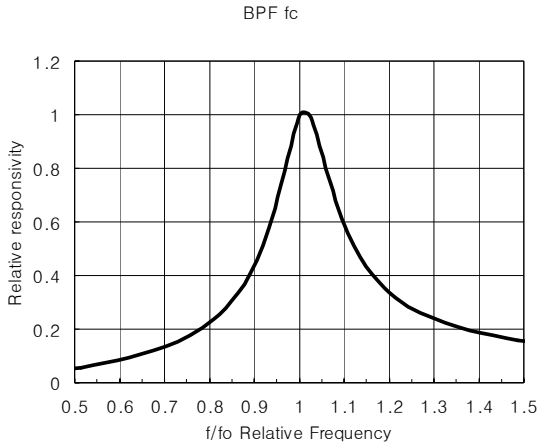

ESD Test Results

Parameter	Conditions	Specification	Results
Machine Model	C=200pF, R=0Ω	Min ±200V	>±200V
Human Body Model	C=100pF, R=1.5kΩ	Min ±2000V	>±2000V
Charged Device Model	R=100MΩ, 1Ω	Min ±800V	>±800V