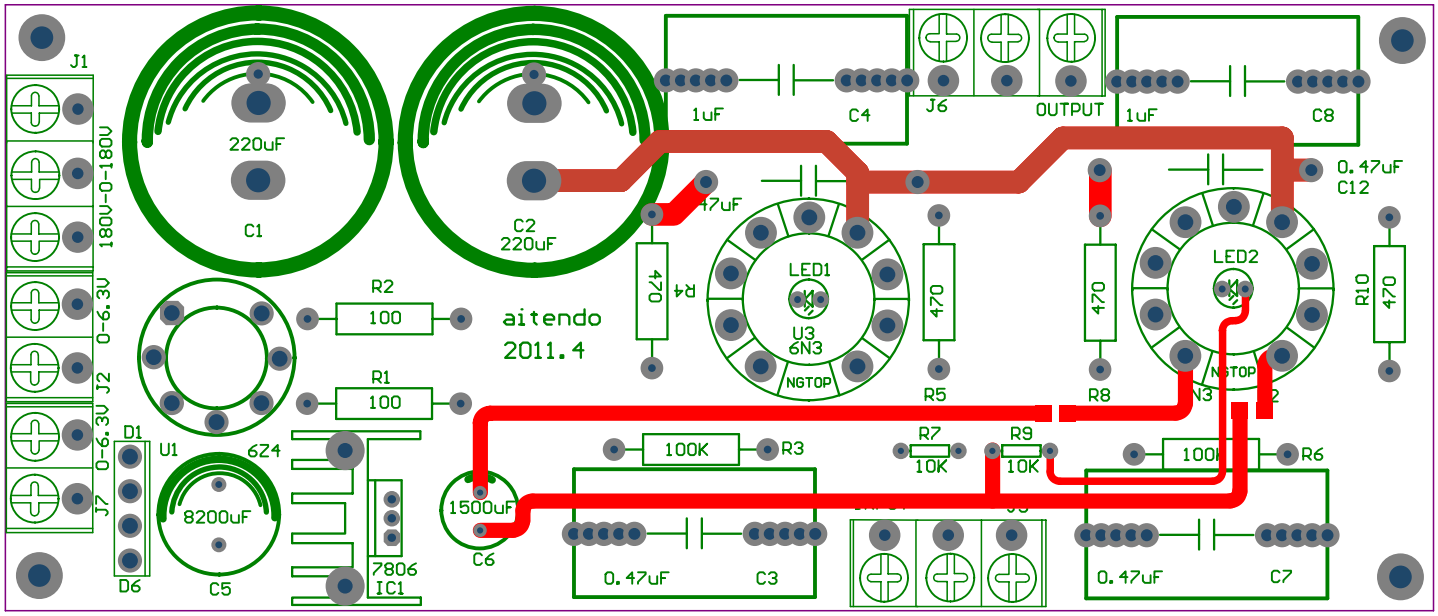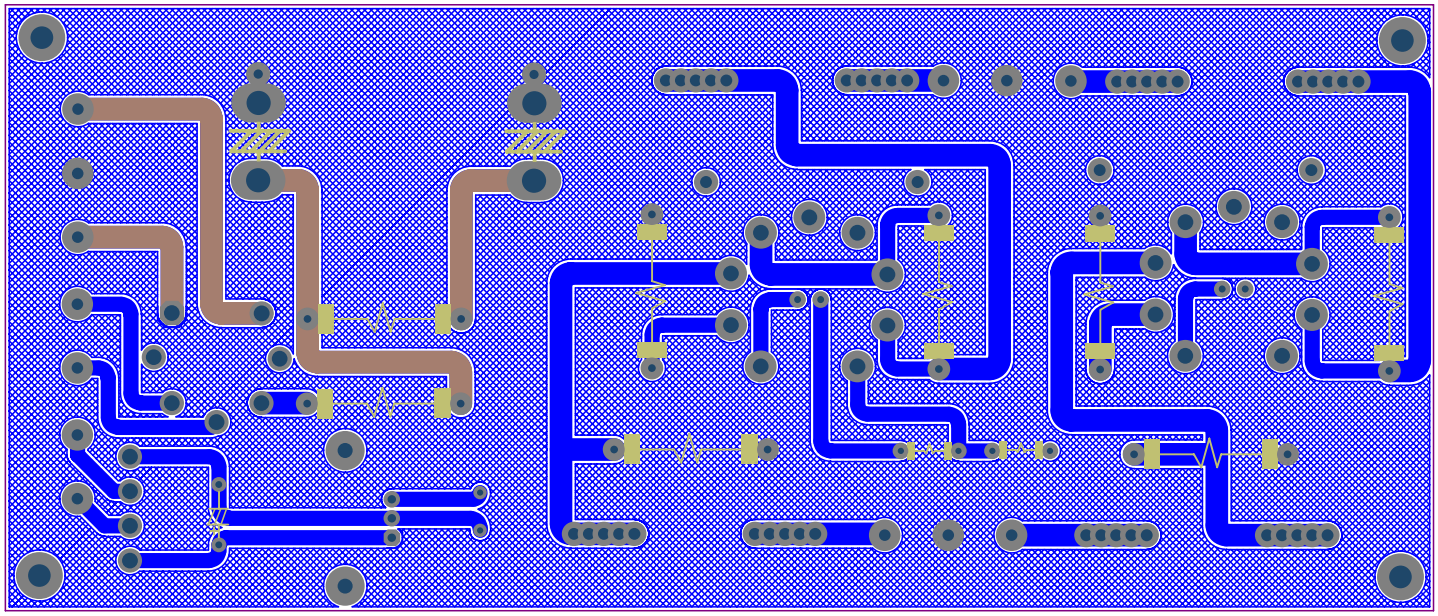
J1
180V-0-180V
0-6.3V
J2
0-6.3V
J7
D1
D6
U1
6Z4
8200uF
C5
220uF
C1
C2
220uF
R2
100
R1
100
7806
IC1
1500uF
C6
aitendo
2011.4
1uF
C4
J6
OUTPUT
1uF
C8
47uF
R4
470
LED1
U3
6N3
NGTOP
470
R5
470
R8
LED2
NGTOP
0.47uF
C12
R10
470
100K
R3
R7
10K
R9
10K
100K
R6
0.47uF
C3
0.47uF
C7